PRAGMA

pipelife.bg

INFRASTRUCTURE POLYPROPYLENE SEWAGE SYSTEM

FASTER INSTALLATION WITH LOWER INSTALLATION COSTS AND LONGER SERVICE LIFE

PIPELIFE
always part of your life

CONTENTS

1 INTRODUCTION 4
1.1 Why should we use profile (ribbed, corrugated/wavy) pipe? 4
1.2 Why polypropylene has been chosen as a material for the Pragma systems? 4
1.3 Why the colour of the pipe system must be different from black? 4
1.4 Operational lifetime 4
2 APPENDIX 5
3 ADVANTAGES 5
4 STANDARDS 6
4.1 Why are standards necessary? 6
4.2 Which standards the Pragma system should meet? 6
4.3 What do the standards require? 6
5 PRODUCT RANGE 9
5.1 Sewage pipes PP-B Pragma® SN≥10 kN/m², SN≥12 kN/m², SN≥16 kN/m² according to EN 13476-3:2018 9
5.2 PP-B Pragma® Fittings SN>8 kN/m² according to standard EEN 13476-3:2018 10
5.3 Drainage pipes PP-B Pragma® SN≥10 kN/m², SN≥12 kN/m², SN≥16 kN/m² according to EN 13476-3:2018 16
6 REQUIREMENTS FOR LAYING THE PRAGMA® PIPE SYSTEM 17
6.1 General assumptions 17
6.2 Bedding conditions 17
6.2.1 Bedding on natural ground 17
6.2.2 Bedding on a foundation 18
6.3 Sidefill, initial backfill and final backfill 19
6.3.1 Sidefill and initial backfill 19
6.3.2 Degree of compaction 19
6.3.3 Final backfill 19
6.3.4 Tamping of the embedment material 20
6.3.5 Trench width 20
6.3.6 Filling necessary for achieving the desired angle of laying 20
7 INSTALLATION OF PRAGMA® PIPES 21
7.1 Connection of Pragma® - Pragma® pipes 21
7.2 Cutting of Pragma® pipes. Mounting sealing ring 23
7.3 Joining to the sewage collectors from Pragma® pipes 26
7.4 Joining to PRO® manholes 27
7.5 Locking against pulling out of socket connection of Pragma® DN/OD pipes 27
8 TRANSPORTATION, LOADING AND UNLOADING, STORAGE 29
9 HYDARAULIC SCALING OF THE PRAGMA® SYSTEM 30
9.1 General assumptions 30
9.2 Governing formulas 30
9.3 Software and scaling tables 31
9.4 Hydraulic nomograph 31
9.4.1 Nomograph for hydraulic scaling of circular pipes with a partially full profile 31
9.4.2 Nomograph for hydraulic scaling of non-pressure flow in circular Pragma® pipes with a full profile 32
9.5 Slopes and velocities of flow in Pragma® pipes slopes 33
10 STRESS AND STRENGTH ANALYSIS OF BURIED PRAGMA® PIPES 34
10.1 Interaction between the pipe and the surrounding soil 34
10.2 Load 36
10.3 Types of soils according to ENV 1046 37
10.4 Necessary data for statistical calculation of the PRAGMA® pipe system 38

1 INTRODUCTION

1.1 WHY SHOULD WE USE PROFILE (RIBBED, CORRUGATED/WAVY) PIPE?

The Pragma pipe systems are distinct with their specific structure of inner smooth layer and profile outer layer. This structure allows with a minimum expenditure of raw material, thus low weight, to be achieved high cross stiffness of the ring (SN>10 kN/m^2, SN>12 kN/m^2, SN>16 kN/m^2 according to ISO 9969).

SN – (nominal ring stiffness)

What is unique about the structure is that it guarantees high ring elasticity and stability to dynamic and static pressure.

1.2 WHY POLYPROPYLENE HAS BEEN CHOSEN AS A MATERIAL FOR THE PRAGMA SYSTEMS?

Polypropylene (PP-B) is the latest generation of thermoplastic materials which are used for the production of pipe systems. This material combines the stability of the polyvinylchloride (PVC) and the elasticity of the polypropylene. This makes it balanced and the most appropriate for meeting the complex requirements of EN 13476-3+A1:2009.

1.3 WHY THE COLOUR OF THE PIPE SYSTEM MUST BE DIFFERENT FROM BLACK?

The practice in the production of thermoplastic systems according to the coextrusion shows that the coloring of the ready products in black is determined by the fact that using secondary materials (scrap) makes technologically impossible the production of materials with a homogeneous color different from black.

That is why Pipelife manufactures its products in a color different from black, proving once again irrefutably the usage of only primary raw materials.

1.4 OPERATIONAL LIFETIME

To demonstrate the long-lasting performance of polyolefin (polyethylene and polypropylene) sewer systems, a study was conducted by Teppfa, the European Association of Plastic Pipe Fittings Manufacturers, in collaboration with the Borealis and LyondellBasell raw material producers. The purpose of the study is to provide sufficient validated data in order to declare an expected duration of at least 100 years of operation of the sewer systems produced according to the standards. In the course of the study, their thermal oxidation decay, maximum allowable stress, long-term behavior at constant tensile strength and the influence of impurities and temperature were investigated. For the study, new pipes and those in use for over 40 years have been used. All of these methods are implemented in accordance with valid international standards (ISO) and the accumulated knowledge of polymer materials science.

The results have shown that the operational lifetime of polyolefin sewer systems is at least **100 years** if the materials, products and installation practices meet the relevant requirements.

2 APPENDIX

The Pragma system is designed for gravity take away of:

- Household,
- Production,
- Rain,
- Mixed and
- Drainage
  waste waters

Pragma system finds application also in:

- Electricity supply and
- elecommunication

As a protective pipe system.
Finds application in the building,
yard and platform sewage systems.

3 ADVANTAGES

- Resistance to abrasion
- Chemical resistance (from pH=2 to pH=12)
- Resistance to high temperatures (60°C at constant flow and from 95°C to 100°C at short-time flow)
- Shock resistance – according to the requirements of EN 1411 and EN 12061
- Guaranteed stiffnesses SN>10 kN/m^2, SN>12 kN/m^2, SN>16 kN/m^2 for the pipes -
  according to the requirements of ISO 9969
- Easy transportation
- Fast and easy assembly
- Easy cutting and cutting out
- Matrix casted elastomeric gaskets EPDM 45 ± 5. EN 681-1
- Guaranteed water tightness of the system from -0,3 bar to +0,5 bar
  according to the requirements of EN 1277
- Low weight
- Long exploitation life
- Low ratio of hydraulic roughness - theoretical 0,0011 mm, exploitation 0,015 mm
  (local resistances are not included)
- High hydraulic conductivity
- A full range of connecting elements (fittings, manholes and tools)
- Compatibility with smooth wall PVC pipes KG type by unique system of adaptors
- An integrated part of the whole sewage system of pipes, fittings manholes and equipments
- A bright inner surface for an easy inspection
- Guaranteed resistance of the system to weak and loess soils
- The pipes and the fittings are with an integrated ribbed socket and a elastomeric gasket
- All the elements of the Pragma system are manufactured under a constant production control
  of the raw material and the ready product.

4 STANDARDS

4.1 WHY ARE STANDARDS NECESSARY?

The standards are a combination of rules and norms based on practical and theoretical observations and research on technical parameters, which the products should meet. They define minimum requirements for quality of the specific product. At the same time they guarantee compatibility of products manufactured by different companies.

All this makes the standard extremely important because it guarantees all the interested parties: designers, engineers, architects, builders, clients and control authorities that the product which is used meets the specific application and possesses all the qualities for unhindered, flawless and lasting exploitation.

4.2 WHICH STANDARDS THE PRAGMA® SYSTEM SHOULD MEET?

The Pragma system is manufactured and meets the requirements of EN 13476-3+A1:2009 Plastics piping systems for non-pressure underground drainage and sewage - Structured-wall piping systems of unplasticized poly(vinyl chloride) (PVC-U), polypropylene (PP) and polyethylene (PE) - Part 3: Requirements for pipes and connecting pats with smooth inner profile surface and for the systems "type B".

It is applicable to the active standards in our country for design of sewage systems: „EN 752:2008 Drain and sewage systems outside buildings" and „Norms for design of sewage systems" adopted by Order № RD-02-14-140 from 17. 04.1989, on the grounds of Art. 201, par. 1 of local requirements, 9 and 10 from 1989, Amended, local requirement, 1 from 1993.

4.3 What do the standards require?

The standard EN 13476-3:2018 orders minimum requirements for the profile pipe systems with regard to the following characteristics:

- **Ring stiffness. Tested according to EN ISO 9969:2007**

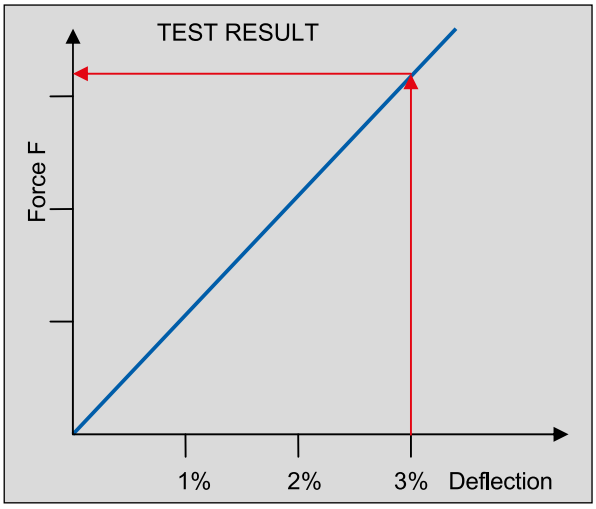

Minimum allowable stiffness:
SN≥4 kN/m² - at DN ≤ 500 mm
SN≥2 kN/m² - at DN > 500 mm

Maximum allowable stiffness:
SN≥16 kN/m²

- **Ring flexibility. Tested according to EN ISO 13968:2008 (old EN 1446)**

The standard requires preserving the structure and elasticity of the material in case of ring deformation up to 30%.

This requirement is difficult to achieve in the manufacture of profile pipes from PE due to the low module of elasticity and the bigger height of the rib, bigger pressure on the outer layer of the pipe and the occurrence of irreversible deformations.

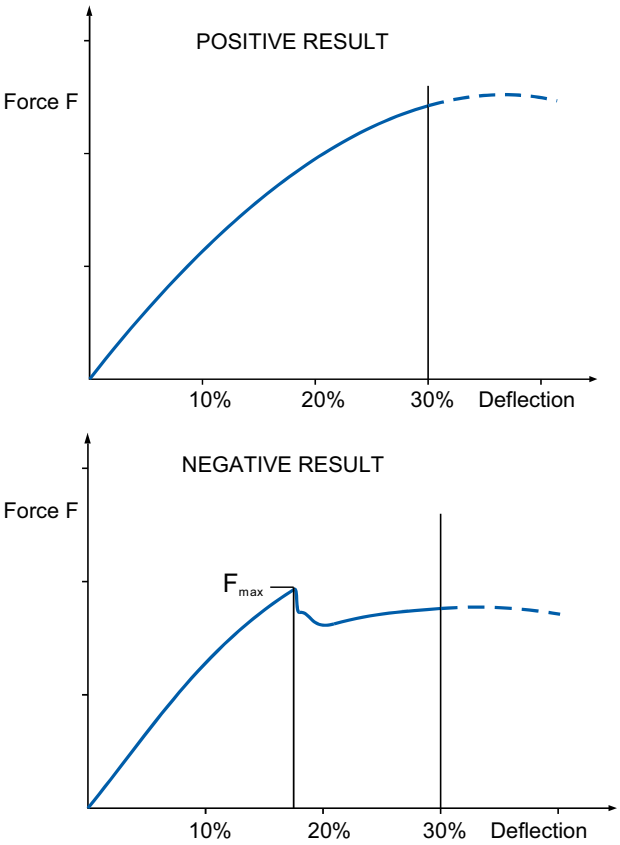

- **Creep ratio. Tested according to EN ISO 9967**

Creeping is a remaining deformation at the plastics as a result of the constantly applied external load. Creeping abates for a period of about two years. Creeping is crucial for the leak tightness of the socket connection.

The standard requires that creep ratio for the PP and PE pipes to be < 4.

Creep ratio is inversely proportional to the module of elasticity. The bigger the module of elasticity, the less is the creeping and vise versa.

- **Requirements for tolerances on pipes, connecting elements and systems. Tested according to EN 1852-1, PE EN12666-1**

The basic geometrical characteristics are included in EN 13476. The correct proportions and tolerances assure us that all elements of the system are the same, fit close to each other and allow a reliable assembly.

This is crucial and important condition which concerns the connections with a elastomeric gasket. The proportions of the pipes and the fitting elements are determined according to their outer diameter DN/OD or their inner diameter DN/ID. Standard EN 13476 defines the following nominal diameters:

DN/ID [mm]: 100, 125, 150, 200, 225, 250, 300, 400, 500, 600, 800, 1000, 1200
DN/OD [mm]: 110, 125, 160, 200, 250, 315, 400, 500, 630, 800, 1000, 1200

According to the diameter, the standard defines the wall thickness of the pipes smooth ends, the sockets and their inner layers as well as the length of any product. The tolerances mentioned in the standard describe mainly and only a limit value namely minimal and maximal.

- **Impact resistance. Tested according to EN 744, EN 1411, EN 12061**

This test checks if the pipes and the fitting elements won't be damaged during transportation, storage and assembly.

According to the standard EN 13476-part 2 and 3, there is only one requirement: TIR < 10% at temperature 0°C.

The point of damage is assessed as a real impact (dynamically active) norm [TIR - true impact rate] for a shipment or production where the maximum value for TIR is 10% [TIR=the total number of damages divided by the total number of impacts, as a percentage, as if the whole shipment was tested].

- **leak-tightness of elastomeric sealing ring type joints (spigot socket). Tested according to EN 1277**

This method tests the system's ability to retain liquids from and out of the system (filtration/infiltration). The test also confirms the connection between the smooth end the elastomeric sealing ring and the socket. The density of the system concerns the ecological aspect of soil and water protection.

The standard requires leak tightness of the connections of - 0,3 bar negative pressure up to + 0,5 bar positive pressure.

The connections are tested in extreme conditions, including connections with an angle and diametrical declination of the ring from negative to positive state. For the rain and sewage pipe systems this is one of the fundamental characteristics.

- **Mechanical strength or flexibility of fabricated fittings. Tested according to EN 12256**

The standard defines the mechanical strength of the fittings and requires if a particular force (F), on a particular length (L) of the fitting, the shift (A) to remain within 170 mm without destruction of the fitting solidity at a critical point (C).

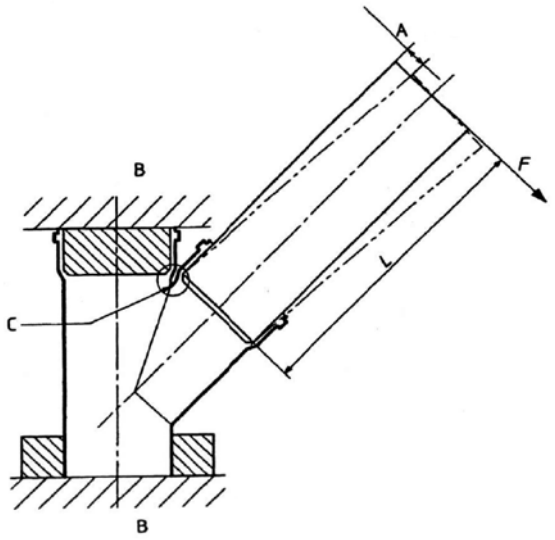

A shift
B connection
C critical point

Nominal diameter DN/OD [1] mm	Minimal moment kN.m (FxL)	Minimal shift mm (A)
110	0,20	170
125	0,29	170
160	0,61	170
200	1,20	170
250	2,30	170
315	3,10	170
355	3,50	170
400	4,00	170
450	4,50	170
500	5,00	170
630	6,30	170
710	7,10	170
800	8,00	170
900	9,00	170
1000	10,00	170

1) For DN/ID fittings the test is conducted by using the parameters, specified for the next bigger DN/OD diameter, instead of the outer diameter of the particular DN/ID diameter

- **Resistance to high temperatures. Tested according to EN 1437 and EN 1055.**

During the exploitation the thermoplastic pipe systems for drainage and household sewage must be resistant to specific temperatures of the waste waters. Due to this, the systems made of thermoplastics, must be resistant to the following temperatures when they are laid in soil and out of the buildings.

According to the empiric requirements of TEPPFA (The European Plastic Pipes and Fittings Association) they are the following:

lasting water temperature of 45°C for dimensions ≤ 200 мм
lasting water temperature of 35°C for dimensions >200 мм

Due to the fact that this type of pipe systems are allowed to be buried in basements or installed at a distance of 1 m around the buildings, they must be resistant to maximal short-term flows waste water with a temperature of up to 95°C.

5 PRODUCT RANGE

5.1 PP-B PRAGMA® SEWAGE PIPES SN≥10 KN/M², SN≥12 KN/M², SN≥16 KN/M² ACCORDING TO EN 13476-3:2018

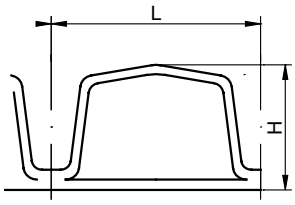

Nominal Diameter DN [mm]		Outside Pipe Diameter D out [mm]	Inside Pipe DiameterD in [mm]	Rib Height H [mm]	Rib Length L [mm]	Product code
DN/OD	160	160	137.9	11.05	6	PRAGMA160/6
DN/OD	200	200	174.8	12.6	6	PRAGMA200/6
DN/OD	250	250	219.8	15.1	6	PRAGMA250/6
DN/OD	315	315	275.5	19.75	6	PRAGMA315/6
DN/OD	400	400	348.6	25.7	6	PRAGMA400/6
DN/ID	500	560	490	35	6	PRAGMA500+ID/6
DN/ID	600	660	588	36	6	PRAGMA600+ID/6
DN/ID	800	930	785	72.5	6	PRAGMA800+ID/6
DN/ID	1000	1140	985	77.5	6	PRAGMA1000+ID/6

***Pipes DN/OD 160 are only available in SN ≥ 12 kN / m² and SN ≥ 16 kN / m².**
**** The dimensions refer to pipes DN / ID600 and SN≥10 kN/m² and SN≥12 kN/m²**
***** Dimensions refer to pipes DN / ID600 and SN≥16 kN/m²**

DN/OD – nominal outer (relative) diameter according to which the pipe or the fitting are manufactured.
DN/ID – nominal inner (relative) diameter according to which the pipe or the fitting are manufactured.
The pipes with diameters from DN/OD 160 up to DN/OD 400 are manufactured with a rotation welded socket.
The pipes with diameters from DN/ID 500 up to DN/ID 1000 are manufactured with a coextruded socket, reinforced with a patented glass-reinforced plastic band in the zone of the rubber sealing.

Note: The images may differ from actual products.

When there is a special inquiry, the following pipes can be delivered:

Nominal Diameter DN [mm]		Outside Pipe Diameter D out [mm]	Inside Pipe Diameter D in [mm]	Rib Height H [mm]	Pipe Length (without socket) L [mm]	Product code
DN/ID	300	343	294	24.5	6	PRAGMA300+ID/6
DN/ID	400	457	392	32.5	6	PRAGMA400+ID/6

5.2 PP-B PRAGMA® FITTINGS SN>8 KN/M² ACCORDING TO EN 13476-3:2018

ПАЙПЛАЙФ БЪЛГАРИЯ МОЖЕ ДА ПРЕДЛОЖИ ПРИ ЗАПИТВАНЕ И РЪЧНО ИЗРАБОТЕНИ СТАНДАРТНИ И НЕСТАНДАРТНИ ФИТИНГИ ДО DN/ID1000.

PP-B PRAGMA® SOCKET

Pragma® sliding repair socket

DN [mm]	D out [mm]	L [mm]	Product code
DN/OD160	169,90	190	PRU160
DN/OD200	213,60	230	PRU200
DN/OD250	266,90	261	PRU250
DN/OD315	336,20	303	PRU315
DN/OD400	426,90	325	PRU400
DN/ID500	624,00	345	PRU+ID500
DN/ID600	706,00* 750,00**	423* 400**	PRU+ID600_NewP* PRU+ID600_OldP**
DN/ID800	997,00	528	PRU+ID800

Pragma® connecting double socket

DN [mm]	D out [mm]	L [mm]	Product code
DN/OD160	169,90	190	PRH160
DN/OD200	213,60	230	PRH200
DN/OD250	266,90	261	PRH250
DN/OD315	336,20	303	PRH315
DN/OD400	426,90	325	PRH400
DN/ID500	624,00	345	PRH+ID500
DN/ID800	997,00	528	PRH+ID800
DN/ID1000	1174	806	PRH+ID1000

PP-B PRAGMA® BEND

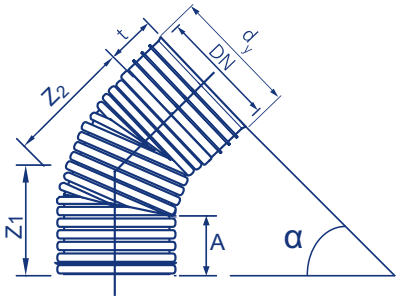

DN [mm]	D out [mm]	α (°)	Z1 [mm]	Z2 [mm]	t [mm]	A [mm]	Product code
DN/OD160	169,90	15	110	21	97	110	PRB160x15°
DN/OD160	169,90	30	121	31	97	108	PRB160x30°
DN/OD160	169,90	45	149	41	97	116	PRB160x45°
DN/OD200	213,60	15	134	23	116	119	PRB200x15°
DN/OD200	213,60	30	159	176	113	132	PRB200x30°
DN/OD200	213,60	45	158	48	116	119	PRB200x45°
DN/OD200	213,60	90	442	459	113	132	PRB200x90°
DN/OD250	266,90	15	186	161	129	170	PRB250x15°
DN/OD250	266,90	30	203	178	129	170	PRB250x30°
DN/OD250	266,90	45	287	261	129	170	PRB250x45°
DN/OD250	266,90	90	459	434	129	170	PRB250x90°
DN/OD315	336,20	15	197	169	148	176	PRB315x15°
DN/OD315	336,20	30	218	217	148	176	PRB315x30°
DN/OD315	336,20	45	320	320	148	176	PRB315x45°
DN/OD315	336,20	90	533	533	148	176	PRB315x90°
DN/OD400	426,90	15	222	220	158	196	PRB400x15°
DN/OD400	426,90	30	250	248	158	196	PRB400x30°
DN/OD400	426,90	45	366	363	158	196	PRB400x45°
DN/OD400	426,90	90	615	613	158	196	PRB400x90°
DN/ID500	624,00	15 30 45 90	447	450	170	202	PRB+ID500xα°
DN/ID600	706,00* 750,00**		563	541	212* 197**	243	PRB+ID600xα°_NewP_HM* PRB+ID600xα°_OldP**
DN/ID800	997,00				247		PRB+ID800xα°_HM

* Dimensions and code refer to fittings for pipes, with diameter DN/ID600 and SN≥10 kN/m^2 and SN≥12 kN/m^2

** Dimensions and code refer to fittings for pipes, with diameter DN/ID600 and SN≥16 kN/m^2

PP-B PRAGMA® BRANCH

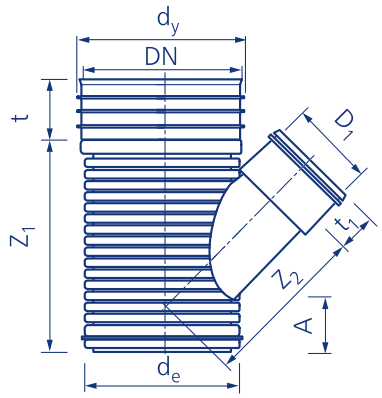

DN [mm]	dy [mm]	D1 [mm]	de [mm]	Z1 [mm]	Z2 [mm]	t [mm]	t1 [mm]	A [mm]	Product code
DN/OD160	169,90	DN/OD160	160	347	214	97	97	108	PREA160/160x45°
DN/OD200	213,60	DN/OD160	200	372	231	116	97	121	PREA200/160x45°
DN/OD200		DN/OD200		417	264	116	116	121	PREA200/200x45°
DN/OD250	266,90	DN/OD160	250	457	456	134	97	140	PREA250/160x45°
DN/OD250		DN/OD200		457	300	134	116	140	PREA250/200x45°
DN/OD315	336,20	DN/OD160	315	484	494	146	97	154	PREA315/160x45°
DN/OD315		DN/OD200		484	338	146	116	154	PREA315/200x45°
DN/OD315		DN/OD250		744	360	146	124	154	PREA315/250x45°
DN/OD400	426,90	DN/OD160	400	660	458	158	94	198	PREA400/160x45°
DN/OD400		DN/OD200		726	491	158	113	198	PREA400/200x45°
DN/OD400		DN/OD250		793	411	158	124	198	PREA400/250x45°
DN/OD400		DN/OD315		892	446	158	130	198	PREA400/315x45°
DN/ID500	624,00	DN/OD160	573	751	300	170	97	262	PREA+ID500/160x45°
DN/ID500		DN/OD200		809	340		116		PREA+ID500/200x45°
DN/ID500		DN/OD250		983	500		124		PREA+ID500/250x45°
DN/ID500		DN/OD315		983	500		116		PREA+ID500/315x45°
DN/ID500		DN/OD400		1098	640		139		PREA+ID500/400x45°
DN/ID600	706,00* 750,00**	DN/OD160	660* 688**	751	300	212* 197**	97		PREA+ID600/160x45°
DN/ID600		DN/OD200		809	340		116		PREA+ID600/200x45°
DN/ID600		DN/OD250		983	500		124		PREA+ID600/250x45°
DN/ID600		DN/OD315		983	500		116		PREA+ID600/315x45°
DN/ID600		DN/OD400		1098	640		139		PREA+ID600/400x45°
DN/ID600		DN/ID500							PREA+ID600/500x45°

PP-B PRAGMA® REDUCER

DN [mm]	de [mm]	di [mm]	d1 [mm]	Z1 [mm]	M [mm]	t [mm]	L [mm]	Product code
DN/OD200	200	176,0	DN/OD160	123	30	97	250	PRR200/160
DN/OD250	250	221,3	DN/OD200	176	49	188	413	PRR250/200
DN/OD315	315	277,4	DN/OD200	180	144	203	527	PRR315/200
DN/OD315	315	277,4	DN/OD250	180	57	124	361	PRR315/250
DN/OD400	400	350,0	DN/OD250	190	165	124	479	PRR400/250
DN/OD400	400	350,0	DN/OD315	190	71	130	391	PRR400/315
DN/ID500	573	498,0	DN/ID400	173	254	139	566	PRR+ID500/400
DN/ID600	660* 688**	588* 600**	DN/ID400	208	300	139	647	PRR+ID600/400
DN/ID600	660* 688**	588* 600**	DN/ID500	208	72	170	450	PRR+ID600/500

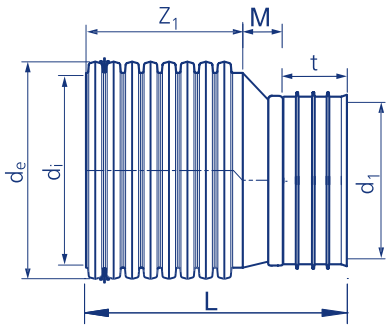

PP-B PRAGMA® ADAPTER TO PVC
(FOR CONNECTING OF PRAGMA END WITHOUT A SOCKET WITH A PVC KG END WITH A SOCKET)

DN [mm]	M [mm]	A [mm]	L [mm]	Product code
DN/OD160	80	84	168	PRP160
DN/OD200	102	100	208	PRR200
DN/OD250	124	145	326	PRR250
DN/OD315	130	163	361	PRR315
DN/OD400	141	184	409	PRR400

* Dimensions refer to fittings for pipes, with diameter DN/ID600 and SN≥10 kN/m² and SN≥12 kN/m²

** Dimensions refer to fittings for pipes, with diameter DN/ID600 and SN≥16 kN/m²

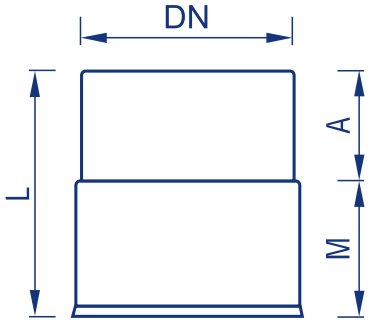

PP-B PRAGMA® PLUG

DN [mm]	Product code
DN/OD 160	PRM 160
DN/OD 200	PRM 200
DN/OD 250	PRM 250
DN/OD 315	PRM 315
DN/OD 400	PRM 400
DN/ID 500	PRM +ID 500
DN/ID 600	PRM +ID600_OldP

PP-B PRAGMA® SEALING RING

DN [mm]	Material	Product code
DN/OD 160	EPDM	PRK 160
DN/OD 200	EPDM	PRK 200
DN/OD 250	EPDM	PRK 250
DN/OD 315	EPDM	PRK 315
DN/OD 400	EPDM	PRK 400
DN/ID 500	EPDM	PRK +ID500_NewF PRK +ID500_NewP
DN/ID 600	EPDM	PRK +ID600_NewP PRK +ID600_OldP
DN/ID 800	EPDM	PRK +ID 800
DN/ID 1000	EPDM	PRK +ID 1000

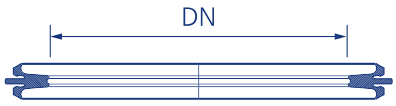

EPDM 45 +/-5 – ethylene propylene diene monomer

PP-B PRAGMA® ASSEMBLY RING WITH A SEAL
(FOR CONNECTING OF PVC KG END WITHOUT A SOCKET WITH A PRAGMA END WITH A SOCKET)

DN [mm]	Product code
DN/OD 160	PRS 160
DN/OD 200	PRS 200
DN/OD 250	PRS 250
DN/OD 315	PRS 315
DN/OD 400	PRS 400

PP-B PRAGMA® SADDLE WITH A NUT

D [mm]	d [mm]	h1 [mm]	h2 [mm]	H1 [mm]	A [mm]	Product code	Images	Schemes With Dimensions
DN/OD 250	DN/OD 160	116			168	PRLATIN160/OD250NL	with a short socket	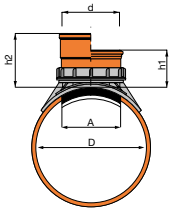
DN/OD 315	DN/OD 160				168	PRLATIN160/OD315NL		
DN/OD 400	DN/OD 160				168	PRLATIN160/OD400NL		
DN/ID 500	DN/OD 160				168	PRLATIN160/ID500NL		
DN/OD 250	DN/OD 160		170		168	PRLATIN160/OD250NLexp	with a long socket[1]	
DN/OD 315	DN/OD 160				168	PRLATIN160/OD315NLexp		
DN/OD 400	DN/OD 160				168	PRLATIN160/OD400NLexp		
DN/ID 500	DN/OD 160				168	PRLATIN160/ID500NLexp		
DN/ID 600	DN/OD 160			255	200	PRLATIN160/ID600R		
DN/ID 800	DN/OD 160				200	PRLATIN160/ID800R		
DN/ID 1000	DN/OD 160				200	PRLATIN160/ID1000R		
DN/OD 315	DN/OD 200			315	200	PRLATIN200/OD315R		
DN/OD 400	DN/OD 200				200	PRLATIN200/OD400R		
DN/ID 500	DN/OD 200				200	PRLATIN200/ID500R		
DN/ID 600	DN/OD 200				200	PRLATIN200/ID600R		
DN/ID 800	DN/OD 200				200	PRLATIN200/ID800R		
DN/ID 1000	DN/OD 200				200	PRLATIN200/ID1000R		

[1] N.B. Housing sewer connection DN160 can be connected to a sewer collector pipe with a diameter D not less than DN/OD250
Housing sewer connection DN200 can be connected to a sewer collector pipe with a diameter D not less than DN/OD315

The saddle with a nut is designed for connecting of building sewage declinations of PVC-U to Pragma® pipes already in exploitation. In case that the building sewage declination is from Pragma® pipes it is necessary to use an extra Pragma® PRP adaptor to PVC (see 5.2.5). The saddle with a nut contains a saddle – a bended surface with the diameter of the pipe, a rubber sealing and a socket with a nut. With the tightening of the screw, the the sealing expands and the saddle is fixed to the pipe as a leak-tight connection is established.

"Saddle with a nut" is manufactured in two types:

- with a short socket for side connection to the pipe
- with a socket for vertical connection – it is used to avoid the pressure of the vertically connected pipe to the saddle. The unique construction plays the role of a compensator in the range of up to 6 cm.

Assembly instructions

1. Make an opening in the pipe with a drilling crown
2. Clean the opening with a scraper
3. Place the saddle tightly in the opening
4. Put a lubricant to the nut and to the socket seal
5. Tighten the nut with a wrench
6. You can find further instructions into the brochure for the saddles

The hole has to be drilled with a Pipelife drilling crown, the chips has to be cleaned with a blade without changing the diameter of the hole. Pipelife guarantees watertightness of the saddles only when there is no vertical and horizontal displacement of the saddle against the collector pipe after installation.

A DRILLING CROWN WITH A NUT AND A WRENCH FOR TIGHTENING THE NUT

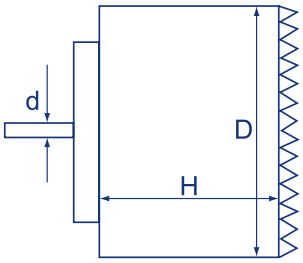

For inlet [mm]	D [mm]	H [mm]	d [mm]	Product code	Saddle type
DN/OD160	168	65	12	PRFREZ160-SP	NL
DN/OD160 and DN/OD200	200	80	13	PRFREZ160/200-SR	R

wrench for saddles type NL

wrench for saddles type R

D [mm]	Product code
160	PRLATKEY

All saddles type NL, always come with PRLATKEY – wrench for Pragma saddles type NL.

All saddles type R have a wrench, included in the kit.

A RUBBER MUFF FOR IN-SITU CONNECTION

For inlet [mm]	OD [mm]	ID [mm]	L [mm]	Dmin[1] [mm]	Dmax[2] [mm]	Product code
DN/OD 110	136	110	51	DN/OD 200	DN/ID 800	PRMAN110
DN/OD 160	186	160	51	DN/OD 250		PRMAN160
DN/OD 200	226	200	51	DN/OD 315		PRMAN200
DN/OD 250	276	250	51	DN/OD 400		PRMAN250
DN/OD 315	341	315	51	DN/OD 500		PRMAN315

[1] Минимален номинален диаметър на тръбата, в която се прави отвора
[2] Максимален номинален диаметър на тръбата, в която се прави отвора

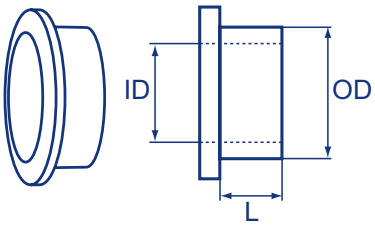

The additional contacts to the extension elements to for manholes (PRO type) and to pipes (PVC-KG и Pragma®) with a big diameter can be done by in-situ connection as the nominal diameter of the connection is from DN/OD110 to DN/OD315.

Assembly instructions

1. Make an opening in the pipe with a drilling crown
2. Clean the opening with a knife
3. Put the rubber muff tightly in the opening

The rubber muff is designed for a direct connection of a smooth wall PVC KG pipe. If the connection will be made with a corrugated pipe Pragma® type it is necessary to mount a PRP adaptor from Pragma® to PVC (see 5.2.5).

A DRILLING CROWN FOR IN-SITU CONNECTION

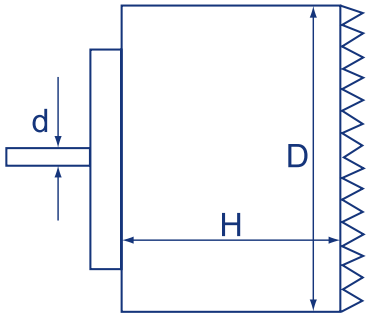

For inlet [mm]	D [mm]	H [mm]	d [mm]	Product code
DN/OD 110	138	100		PRFREZ110
DN/OD 160	184	100		PRFREZ160
DN/OD 200	225	100	13	PRFREZ200
DN/OD 250	275	150		PRFREZ250
DN/OD 315	340	150		PRFREZ315

5.3 PP-B PRAGMA® DRAINAGE PIPES SN≥10 KN/M², SN≥12 KN/M², SN≥16 KN/M² ACCORDING TO EN 13476-3:2018

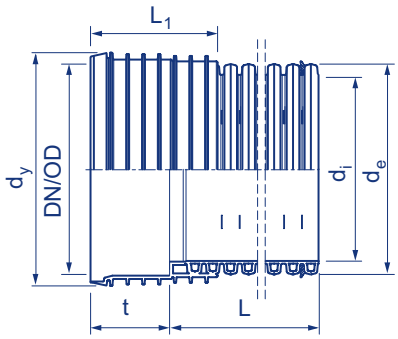

DN/OD [mm]	di [mm]	de [mm]	dy [mm]	t [mm]	L1 [mm]	L [m]	Perforation type	Product code
160	139	160	184	94	140	6,0		PRAGMADR160/6-220g
200	176	200	227	113	162	6,0		PRAGMADR200/6-220g
250	221.3	250	283	129	185	6,0	LP	PRAGMADR250/6-220g
315	277.4	315	355	148	211	6,0		PRAGMADR315/6-220g
400	350	400	451	158	251	6,0		PRAGMADR400/6-220g

*Face of perforation for all pipes > 50 cm^2/m

The pipes are manufactured with a welded socket. The Pragma® drainage pipes are totally compatible with the fittings of the sewer pipes Pragma® DN/OD – nominal diameter.

If the client requires, can be delivered pipes with a TP or MP perforation type.

AT/99-02-0752-02 COBRTI INSTAL
AT/2003-04-0506 IBDiM
PN/EN 13476-3
DIN 4262-1

certificate GIG Nr 4265058-12
certificate Kiwa Denmark BRL 9208

Perforation types

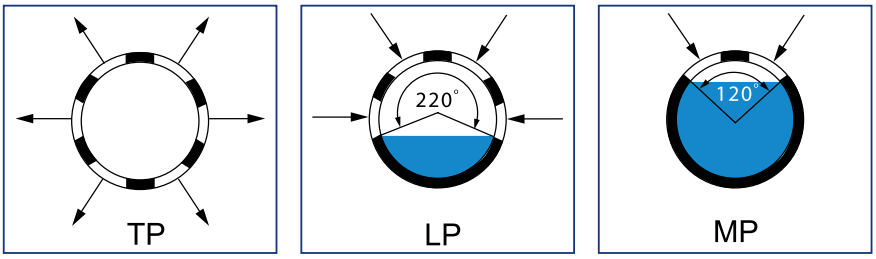

6 REQUIREMENTS FOR LAYING THE PRAGMA® PIPE SYSTEM

6.1 GENERAL ASSUMPTIONS

The most important factor for achieving a satisfactory assembly of a plastic container is the interaction between the pipe and the surrounding soil. A bigger pipe's resistance value is achieved by the soil in the pipe's zone. Therefore the type of the backfill and the degree of sealing in the pipe's zone are of great importance. Hence in every sewage project the engineer must determine the laying conditions like:

1. Conditions of the existing soil layers and fitness for their usage for trench basis and backfill.
2. Geotechnical characteristics of the soil used for bedding layer as well as the way they are performed.
3. Appropriate class of pipe's stiffness.

At the beginning of every project, the first step is to be made a geotechnical research of the layers in which the pipe will be laid. This research as well as the lab tests must be made with regard to the establishment of soil type and its structure, the degree of sealing and the level of the underground waters.

6.2 BEDDING CONDITIONS

The bedding design depends on the soil geotechnical characteristics of the zone in which the sewer pipe is to be laid. In general two methods of pipe bedding can be considered:

- natural bedding on the native undisturbed ground;
- bedding on the foundation made of selected soil material, compacted to the required level.

6.2.1 BEDDING ON NATURAL GROUND

In some instances, it may be acceptable to lay Pragma® pipe on the bottom of the trench, but only in granular, dry soil which is free of large stones (>20 mm), such as gravel, coarse sand, fine sand and sandy clay) In such soil conditions, the pipe is laid on the thin (10 to 15 cm), uncompacted bedding directly underneath the pipe. The purpose of the bedding is to bring the trench bottom up to the grade and to provide a firm, stable and uniform invert support of minimum 90° angle (see fig. 6.1)

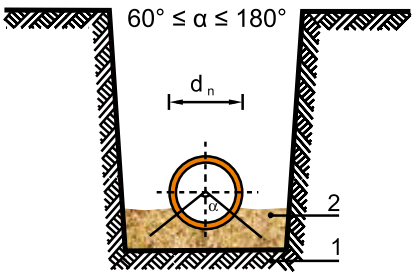

1- existing soil
2- bedding layer

Figure 6.1 Laying in natural conditions

6.2.2 BEDDING ON A FOUNDATION

There are situations where a pipeline should be laid on a foundation. These include:

- natural bedding on the native undis-turbed ground;
- bedding on a foundation made of selected soil material, compacted to the required level.

There are situations where a pipeline should be laid on a foundation. These include:

1. when in favourable natural ground conditions, the trench is mistakenly overcut to a depth below the designed pipe level;

2. in rocky soils, cohesive soils (clays) and silty soils;

3. in weak, soft soils, such as organic silts and peat;

4. in any other conditions where the project document requires a foundation.

An example of the solution for cases 1 and 2 is presented in Figure 5.2. The pipeline is laid on two layers made of sandy soils or gravel soils with maxi-mum size of 20 mm.

- The foundation layer is made of well compacted soil of thickness 25 cm (minimum 15 cm).
- The bedding layer is 10 to 15 cm thick, uncompacted.

In the case of weak soils, depending on the thickness of the weak soil layer below the designed pipeline level, two solutions can be applied.

1. Where the thickness of the weak soil layer is ≤ 1.0 m (see fig. 6.3).
In this case, the weak soil is removed and the trench is filled with a well-compacted layer of a broken stone and sand mixture (volume ratio 1:0.3) or a broken stone and sand mixture (volume ratio 1:0.6). The foundation is laid on a geotextile.

2. Where the thickness of the weak soil layer is > 1.0 m (see fig. 6.3).
In this case, a 25 cm thick foundation made of a well-compacted layer of a gravel and sand mixture (volume ratio 1:3) or a broken stone and sand mixture (volume ratio 1:0.6) laid on a geotextile is recommended

In all cases the sealing of the founding layer must be from 85% up to 95% according to Proctor

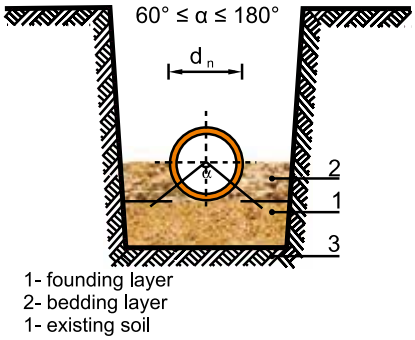

Figure 6.2 An example for laying in resistant soil

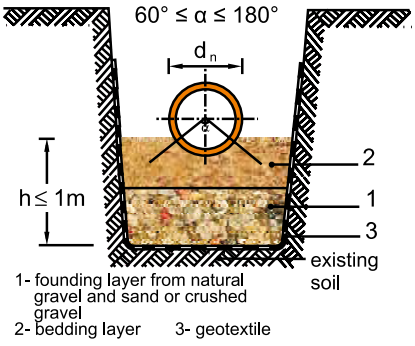

Figure 6.3 An example for laying in weak soil (loess) depth ≤ 1.0 m

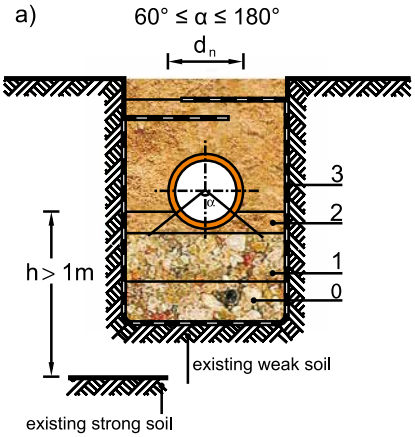

Figure. 6.4 An example for laying in weak soil (loess) > 1.0 m

0 – additional 25 cm founding layer from crushed gravel and sand or from natural gravel and crushed gravel
1 – founding layer from crushed gravel and sand or from natural gravel and sand
2 – bedding layer
3 – geotextile

6.3 SIDEFILL, INITIAL BACKFILL AND FINAL BACKFILL

Apart from a proper foundation and bedding, the soil class and density realised in the sidefill (haunching) and initial backfill are important factors in achieving a satisfactory installation of a flexible pipeline.

6.3.1 SIDEFILL AND INITIAL BACKFILL

The criteria to select material as suitable to use as fill in the haunching zone (sidefill) and directly above the crown of the pipe (initial backfill) are based on achieving adequate soil strength and stiffness after compaction.

Suitable soil material includes most graded, natural granular materials with maximum particle size not exceeding 10% of the nominal pipe diameter or 60 mm, whichever is smaller.
The fill material should not contain foreign matter such as snow, ice or frozen earth clumps.

a – main backfill
b – cover depth
c – pipe zone
d – bedding (if required)
e – foundation (if required)

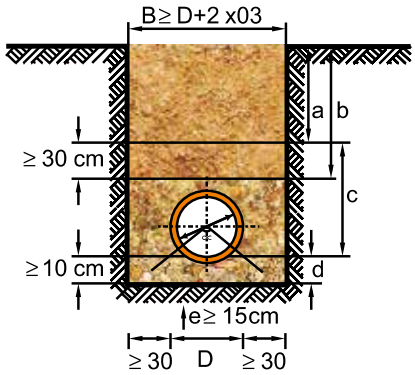

Figure 6.5 Pipeline section

COVERING AROUND THE PIPE'S ZONE AND FOLLOWING BECKFILL		
Material	**Particle diameter [mm]**	**Note**
Gravel, Crushed stones	8-22, 4-16 8-12, 4-8	The most appropriate soil material, maximum 5 to 20% particles with size of 2 mm
Gravel	2-20	Appropriate soil material, maximum, 5 to 20% particles with size of 0,2 mm
Sand, Moraine gravel	0.2-20	Relatively appropriate soil material, maximum 5% particles with size of 0,02 mm

Table 3.1 Characteristics of the materials for covering around the pipe and backfill

6.3.2 DEGREE OF COMPACTION

The required degree of fill compaction depends on loading conditions.

- In paved areas, the minimum soil compaction in the pipe zone is 90% of modified Proctor test density.
- Outside of paved areas, the fill should be compacted to:

- 85% of modified Proctor test density if the depth of cover is < 4.0 m;
- 90% of modified Proctor test density if the depth of cover is ≤ 4.0 m.

The fill material should be compacted to layers of 10 to 30 cm in thickness.
The thickness of the initial backfill over the crown of the pipe should be minimum 30 cm

6.3.3 FINAL BACKFILL

The material used for completing the backfilling can be made with excavated material if suitable to achieve the required project compaction and can have maximum particle size of 300 mm.
For pipelines of diameter D < 400 mm and with an initial backfill thickness of 15 cm, the final backfill material should not contain particles of size > 60 mm.

In paved areas, the minimum compac-tion of the final backfill should be 90% of modified Proctor test density.

6.3.4 TAMPING OF THE EMBEDMENT MATERIAL

The requirements for the degree of sealing depend on the general load and must be defined in the design documentation. The tamping must be made with different types of tamping. Depending on the equipment, the layers' thickness and the soil susceptibility, different results of sealing can be achieved. Table 3.2 gives data which are related to gravel, sand clay and alluvium soils.

COMPACTION METHODS							
Equipment	Weight [kg]	Maximal layer's thickness before compaction [m]		Maximal thickness of the initial backfill above pipe [m]*	Number of passes to obtain compaction		
		gravel, sand	loam, clay, silt		85% modified Proctor test	90% modified Proctor test	95% modified Proctor test
Close treading	-	0.10	-	-	1	3	6
Hand tamping	min. 15	0.15	0.10	0.30	1	3	6
Vibrating tamper	50-100	0.30	0.20-0.25	0.50	1	3	6
Separated vibrating plates **	50-100	0,20	-	0.50	1	4	7
Vibrating plate	50-100 100-200 400-600		- - 0.20	0.50 0.40 0.80	1 1 1	4 4 4	7 7 7

Table 3.2 Compaction methods

** before compacting equipment is used*

*** to compact the soil on both sides of the pipe*

6.3.5 TRENCH WIDTH

The width of the trench should enable the proper placement and compaction of the fill material. The minimum width of the sidefill is b_{min}=30 cm. Thus, the minimum width of the trench (B) at the top of the pipe is:

$$B = D + (2 \times b_{min})$$

If the stiffness of the native undisturbed ground is lower than the stiffness of the designed fill, the trench width (B) should be:

(in general, this condition deals with pipes in diameter dn > 250 mm because for pipes of smaller diameter the trench width (B) fills this condition)

$$B \geq 4 \times d_n$$

Such situations can take place in granular soils of low density (I_D < 0.33) or in cohesive soils of plastic limit I_L > 0.0.

6.3.6 FILLING NECESSARY FOR ACHIEVING THE DESIRED ANGLE OF LAYING

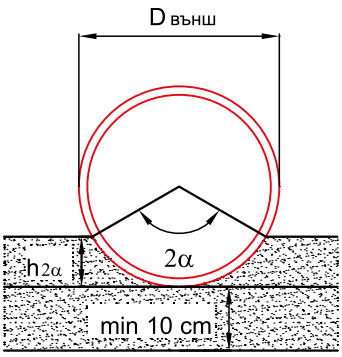

DN [mm]	D out [mm]	Angle of laying 2α			
		60°	90°	120°	180°
		$h_{2\alpha}$ [cm]			
DN/OD160	160	1	2	4	8
DN/OD200	200	1	3	5	10
DN/OD250	250	2	4	6	12
DN/OD315	315	2	5	8	16
DN/OD400	400	3	6	10	20
DN/ID500	573	4	8	14	29
DN/ID600	688	5	10	17	34
DN/ID800	925,2	6	14	23	46
DN/ID1000	1140,4	8	17	28	57

7 INSTALLATION OF PRAGMA® PIPES

7.1 CONNECTION OF PRAGMA® PIPES

PP-B Pragma® pipe | PP-B Pragma® branch | PP-B Pragma® pipe

PP-B Pragma® pipe | PP-B Pragma® Монтажен assembly with a seal | PVC pipe with smooth walls

PVC pipe with smooth walls | PP-B Pragma® Adaptor to PVC | PP-B Pragma® pipe

The coupling of two Pragma pipes is done in the following order:

- Both spigot and socket ends of the pipes are coated with Pipelife own recommended lubricant.

- The depth of the socket is measured

- The measured depth of the socket is marked with a marker on the spigot end of the pipe, which will be inserted into the socket. This bookmarking represents the installation control line

- Push the pipe into the socket until the designated installation control line is aligned with the socket edge.

At the moment, when Pragma DN/ID500 is coupled, two types of sealing EPDM rings are used:

- At the moment, when Pragma DN/ID500 is coupled, two types of sealing EPDM rings are used:

- Second type of EPDM sealing ring for coupling the spigot end of a pipe or a fitting to the socket end of a fitting.

- The two sealing rings have different outside diameters. The first type has smaller outside diameter compare the second type.

7.2 CUTTING OF PRAGMA®. MOUNTING SEALING RING

- Cut pipe in the corrugation valley, using a fine tooth carpente's saw.
- Sealing ring in the first plane between the ribs.

When a Pragma pipe has to be shortened, cutting should be done between the ribs as it shown in the picture below:

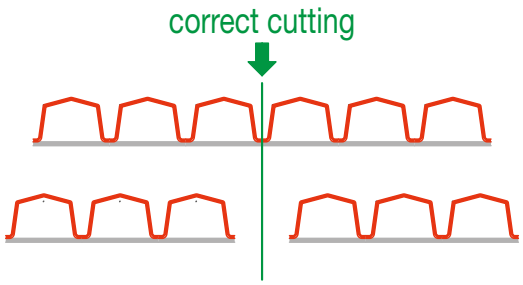

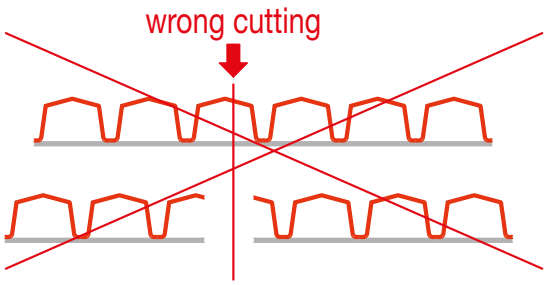

In this way, the integrity of the ribbed structure of the pipe is guaranteed and the shortened length remains a multiple of the length of the rib. This is important when the spigot is coupled into the socket and for the exact positioning of the EPDM sealing ring.

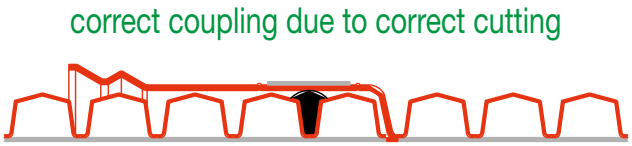

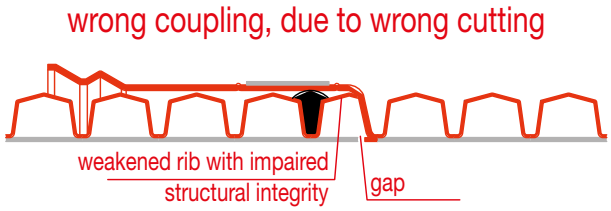

When the pipe cut is not made between the ribs, then the integrity of the ribbed structure of the pipe is disturbed, the shortened length is no longer a multiple of the rib length, which consequently leads to a weakening of the pipe endurance in this zone, the EPDM sealing ring can no longer be positioned correctly when the spigot is coupled into the socket. All these things can lead to further deformations and loss of watertightness in the spigot-socket connection.

Note: The images may differ from actual products.

When cutting Pragma® pipes with diameters DN/ID500, DN/ID600, DN/ID800 and DN/ID1000 and when the cut passes through the ventilation channel of the ribs, an opening is created at the front of the pipe. In order to ensure the watertightness of the spigot-socket connection, this opening must be filled with a fast-setting water-tight material in the sequence shown in the pictures below:

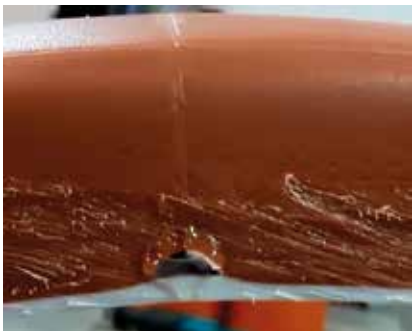

Filling the openings of the ventilation channels of the ribs is only necessary when Pragma pipes with diameters DN/ID500, DN/ID600, DN/ID800 and DN/ID1000 diameters are cut.

7.3 JOINING TO THE SEWAGE COLLECTORS FROM PRAGMA® PIPES

Joining to the sewage collectors made by Pragma® pipes ia made by two ways:

- Joining by a branch and a bend (see 5.2.2 and 5.2.3). It is recommended when joining to newly-laid collector which is still not in exploitation.
- Joining by a saddle with a screw or with an in-situ connection (see 5.2.9 and 5.2.11). It is recommended when joining to an existing collector which is in exploitation.
- In both cases it is recommended joining to be in the upper third of the collector's section at an angle φ to the collector's vertical axis. According to the position of the collector and the joining sewer to each other there are three main types:

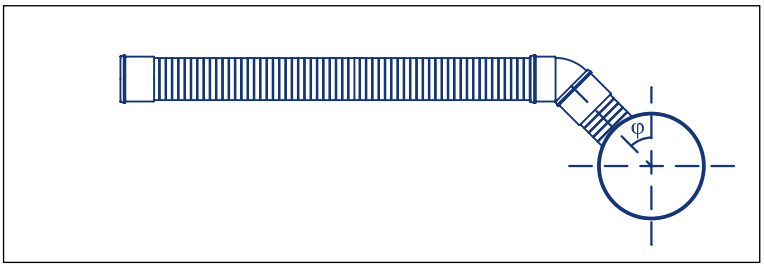

Figure 7.1 Joining of side sewer to a collector

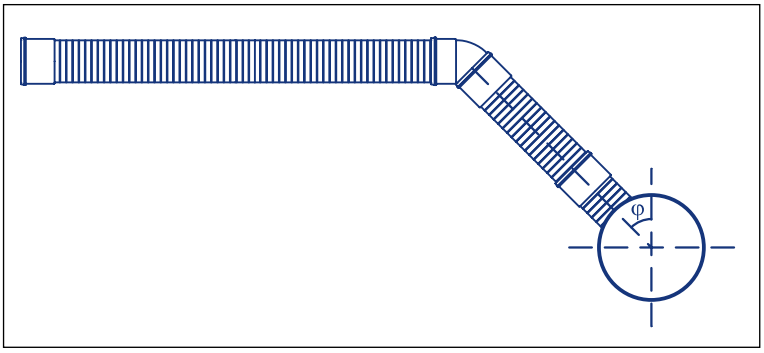

Figure 7.2 Joining of side sewer to a collector in case of displacement

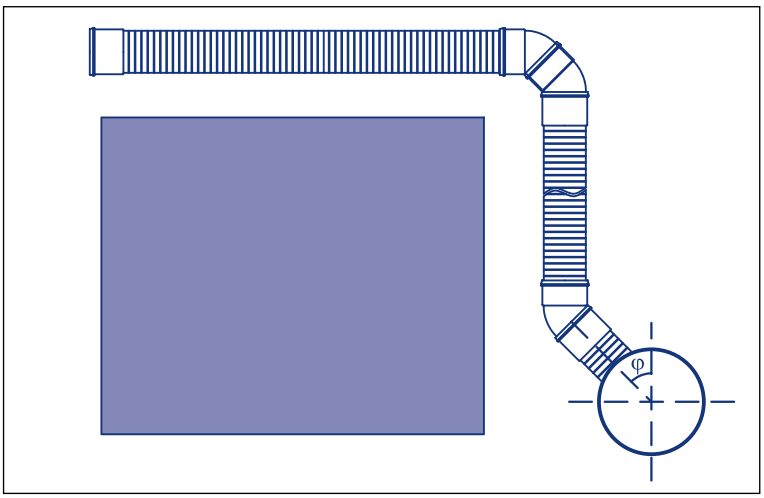

Figure 7.3 Joining of side sewer to a collector in case of displacement and an obstacle

7.4 JOINING TO PRO® MANHOLES

The PRO® manholes are designed and manufactured for suitable and safe joining to the pipe's fittings of the Pragma® series.
For more details see the Pipelife catalogue for PRO® manholes

7.5 LOCKING AGAINST PULLING OUT OF SOCKET CONNECTION OF PRAGMA® DN/OD PIPES

In practice pipes are buried in unfavorable soil conditions – loess, landslides, expansive soils which can lead to dislocation of the bed of the already buried pipes. In case of mass construction of infrastructure sewerage, structured-wall pipes with socket connection with rubber sealing are used. Under these conditions there is a risk of socket pulling out and respectively leak-tightness loss and soil contamination. Nevertheless, it is possible, due to carelessness in work during the backfill, the pipe not to be tight well and when the trench and the bed are not cultivated and stabilized the risk of pulling out is increased.

That is why Pipelife Bulgaria decided to offer a simple and effective tool for locking the socket connection which practically guarantees its protection against pulling out.

On the Figures below can be seen the different elements, necessary for this type of connection, the pipes prepared for assembly and the final result – Pragma® locked socket connection.

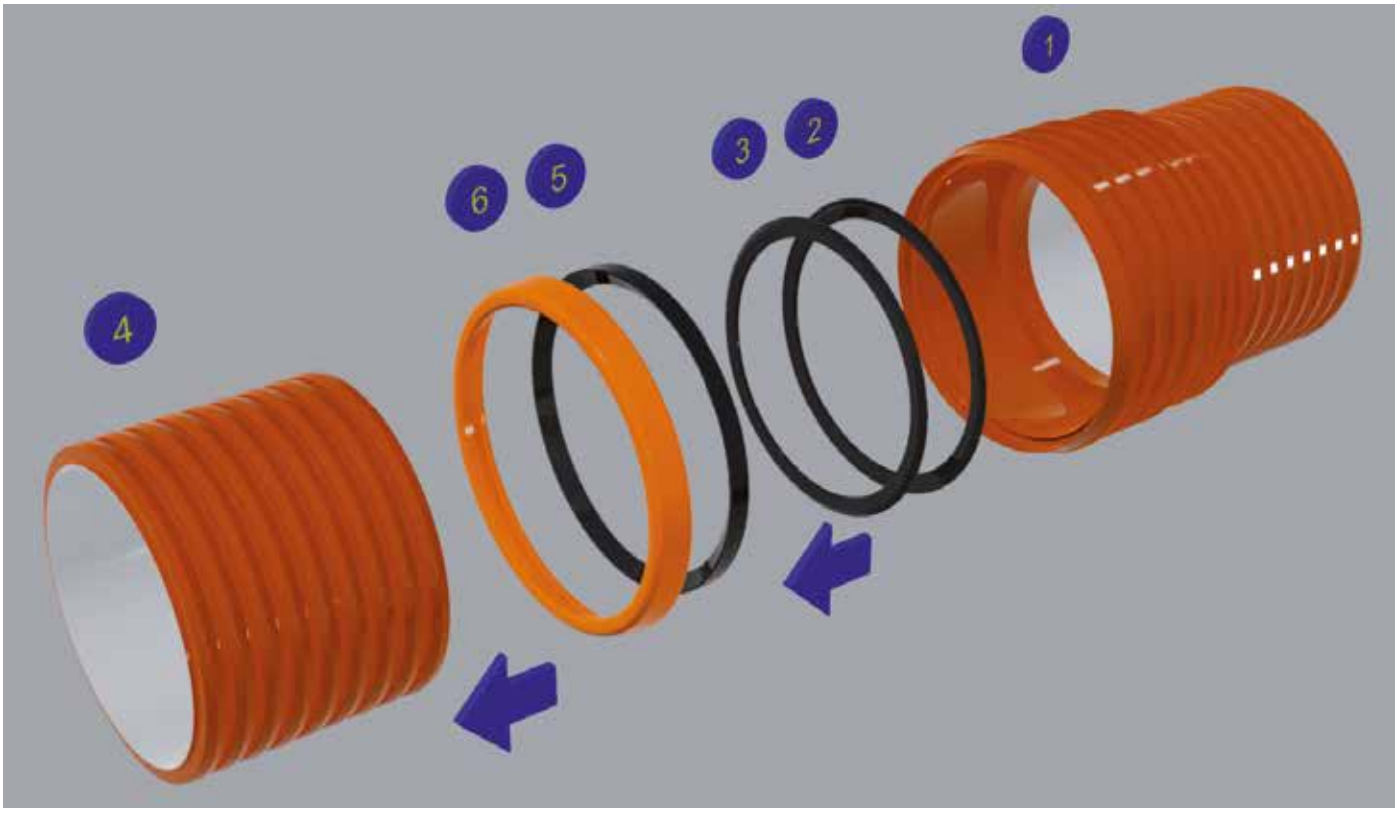

Figure 7.4 Necessary Elements For The Locked Socket Connection

1. Socket End Of Pragma Pipe;
2. EPDM Sealing Ring;
3. EPDM Sealing Ring Turned Opposite To The Direction Of Pushing The Smooth End In The Socket End;
4. Smooth End Of Pragma Pipe;
5. EPDM Sealing Ring With "Click-Ring" Assembly Ring;
6. "Click-Ring" Assembly Ring;

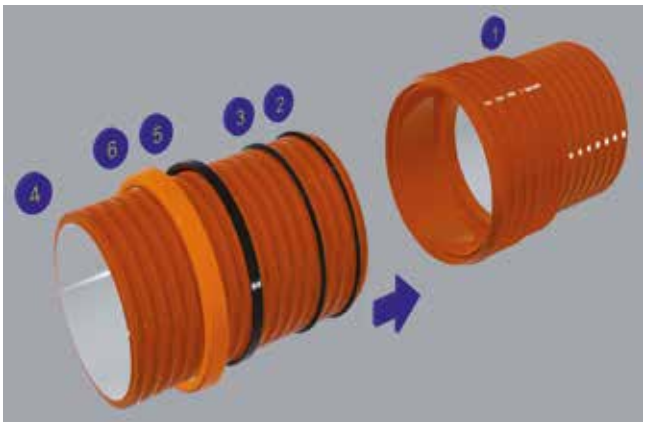

Figure 7.5 Pipes Ready For Assembly

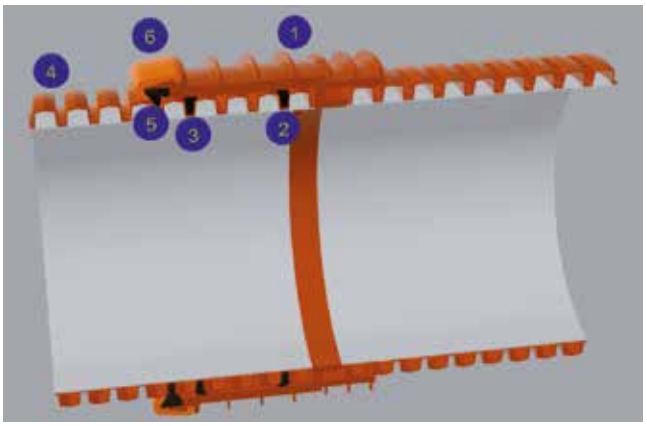

Figure 7.6 Pragma Locked Socket Connection

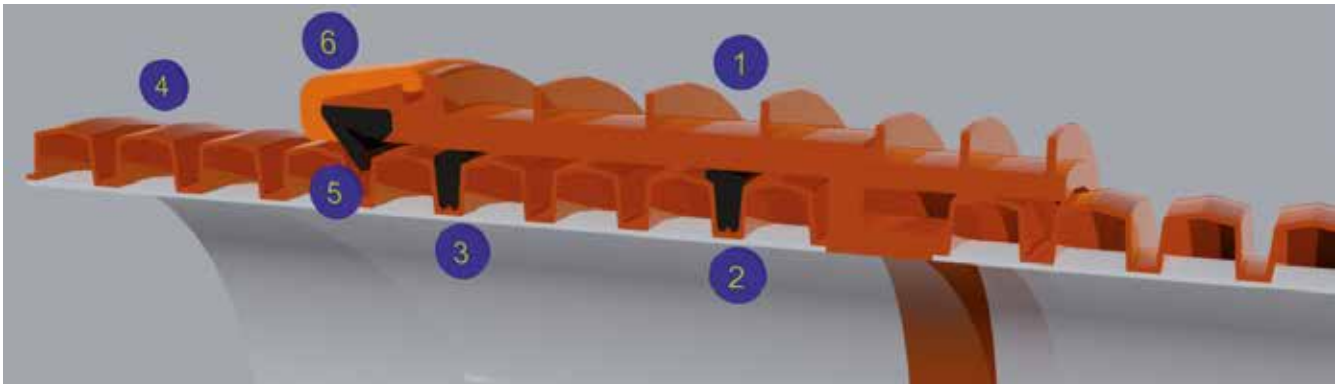

Figure 7.7 Pragma Locked Socket Connection – Detailed View

You must bear in mind that the additional elements necessary for locking of socket connection (on the Figures they are with numbers 3, 5 and 6 while their description is given under Figure 7.4) are part of the standard Pragma product. They are available goods, kept in stock and practically they lead to an insignificant raise in the cost but at the same time they contribute to the securing of the socket connection against pulling out. The assembly can be made by any normal fitter because it doesn't require any special skills or tools.

The locking of the socket connection is applicable for Pragma DN/OD160, DN/OD200, DN/OD250, DN/OD315 and DN/OD400 pipes, on one hand because the necessary assembly "Click Ring" is manufactured for these series, on the other hand the Pragma DN/ID500, DN/ID600, DN/ID800 and DN/ID1000 pipes having bigger diameters are heavier, respectively their own weight protects them from pulling out of the socket connection.

The sphere of application of the locked socket connection includes the above-mentioned loess soils, expansive soils, landslides and cases of strict assembly requirements – for example drainage systems for sanitary depots.

Once made, the locked socket connection is practically impossible to disassemble therefore the fitters and the designers must consider its need and application carefully.

8 TRANSPORTATION, LOADING AND UNLOADING, STORAGE

The wrong transportation (as well as the wrong storage) can lead to deformation or to damaging of the pipes, the fitting parts and the sealing rings with can eventually cause problems when laying and functioning of the already assembled pipes.

For transportation must be used vehicles with a flat and clean loading surface e.g. without roughnesses for example protruding nails. The pipes can stick up (height) up to the five times the nominal diameter of the pipe. The pipes must lay along their length on the floor (see Fig. 8.1).

Harsh lifting and dropping of the pipes must be avoided when loaded and unloaded. Their throwing when manually unloaded is inadmissible (see Fig. 8.4). For mechanized loading and unloading of packed pipes must be used appropriate transportation lifting vehicles like motor truck with a wide working surface or a crane.

The pipes must be stored on flat surface and the allowed height is from 2.0 [m] up to 3.0 [m] (for pipes in pallets). For storing of free pipes the allowed height is up to 1.0 [m]. A two-way aligning is recommended during transportation and storage – on two adjacent rows the ends with sockets (respectively without sockets) must be pointed at different directions (see Fig. 8.5). Thus the load between the different rows is more uniform and placing of additional wooden supports is avoided. The wooden supports are placed only under the lowest row. The pipe must lay at least on three wooden supports each with a minimal width of 10 [cm].

The Pragma pipe system can be stored outside. They are resistant to UV rays minimum two years as they retain their physical-machanical qualities unchanged, regardless of the color change.

	Correct	Wrong
Transportation	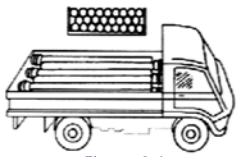 *Figure 8.1*	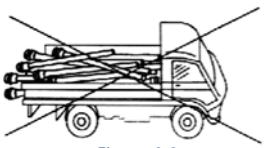 *Figure 8.2*
Unloading	*Figure 8.3*	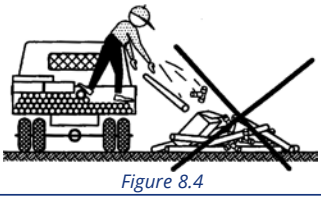 *Figure 8.4*
Storage	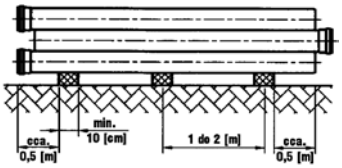 *Figure 8.5*	

9 HYDARAULIC SCALING OF THE PRAGMA® SYSTEM

9.1 GENERAL ASSUMPTIONS

A hydraulic design concerns selecting parameters for gravity flow sewers, which normally do no flow full. The objective of hydraulic design is to determine the most economic pipe diameter at which the required discharge is passed. In practice, computation of hydraulic pipe parameters are based on the following assumptions:

1. The assumption of a uniform flow, meaning:

- the depth (h), flow area (f) and velocity (v) at every cross-section remain constant at the whole considered pipe section;
- the energy grade line, water surface and pipe bottom slope are parallel.

2. In the pipe system, the flow regime is turbulent.

9.2 GOVERNING FORMULA

In practice, for computational purposes, the following semi-empirical equations are used:

1) $$Q = V \cdot F \; ; \; F = \frac{\Pi \cdot d^2}{4}$$

2) $$Q = \frac{\Pi \cdot d^2 \cdot V}{4}$$

where:
Q – flow rate, [m³/s]
V – average flow Velocity, [m/s]
F – flow area, [m²]

Motion resistance on the pipe lenght are calculated based on unitary hydraulic gradient. Unitary hydraulic gradient for closed pipes with a settled turbulent motion is calculated based on Darcy-Weisbach formula:

3) $$i = \lambda \cdot \frac{1}{d} \cdot \frac{v^2}{2g}$$

where:
i – unitary losses for conquering a friction resistance equal to slope of a pipe bottom with a free surface of water, [m/m]
d – inner diameter of the pipe, [m]
V – average flow velocity, [m/s]
g – acceleration of gravity, [m/s²]
λ – linear resistance coefficient
Re – Reynold number
ν – coefficient of kinematic viscosity, [m²/s] (for water at temp 10°C ν = 1,308x10-6 [m²/s])
k – coefficient of absolut roughness, [mm]

Hydraulic resistance coefficient (λ) is calculated based on Colebrook-White formula:

$$\frac{1}{\sqrt{\lambda}} = -2\lg\left(\frac{2{,}51}{Re \cdot \sqrt{\lambda}} + \frac{k}{3{,}71 \cdot d}\right)$$

$$Re = \frac{V \cdot d}{\nu}$$

The Bretting formula for pipes flowing partly full:

4) $$\frac{q_n}{Q} = 0.46 - 0.5 \cdot \cos\left(\Pi \cdot \frac{h_n}{d}\right) + 0.04 \cdot \cos\left(2\Pi \cdot \frac{h_n}{d}\right)$$

where:
Q – flow rate in the pipe flowing full, [m3/s]
qn – flow rate in the pipe flowing partly full, [m³/s]
hn – actual depth of flow, [m]
d – inner diameter of the pipe, [m]

Ratio of absolute pipe wall – k, [mm]

Laboratory roughness	**0,0011 [mm]**
Pipe's roughness in exploitation (without regard of the local resistance)	**0,015 [mm]**
Artificially bigger roughness the local resistances at the main sewage collectors	**0,25 [mm]**
Artificially bigger roughness with regard to the local resistances at secondary sewage collectors	**0,40 [mm]**

The values of the artificially bigger roughness are recommended but not compulsory. The designers can choose another artificially bigger value of K or another method for calculation of local resistances.

9.3 SOFTWARE AND SCALING TABLES

Besides the following nomographs Pipelife offers to the designers other helpful tools for hydraulic scaling. In the "For the designer" section in www.pipelife.bg can be found and used a web software for hydraulic calculation of a particular sewage section, a software for hydraulic calculation of the sewage network and scaling tables for filling h/D=0.5, h/D=0.7 *и* h/D=1.0

9.4 HYDRAULIC NOMOGRAPHS

9.4.1 A NOMOGRAPH FOR HYDRAULIC SCALING OF CIRCULAR PIPES WITH PARTIALLY FULL PROFILE

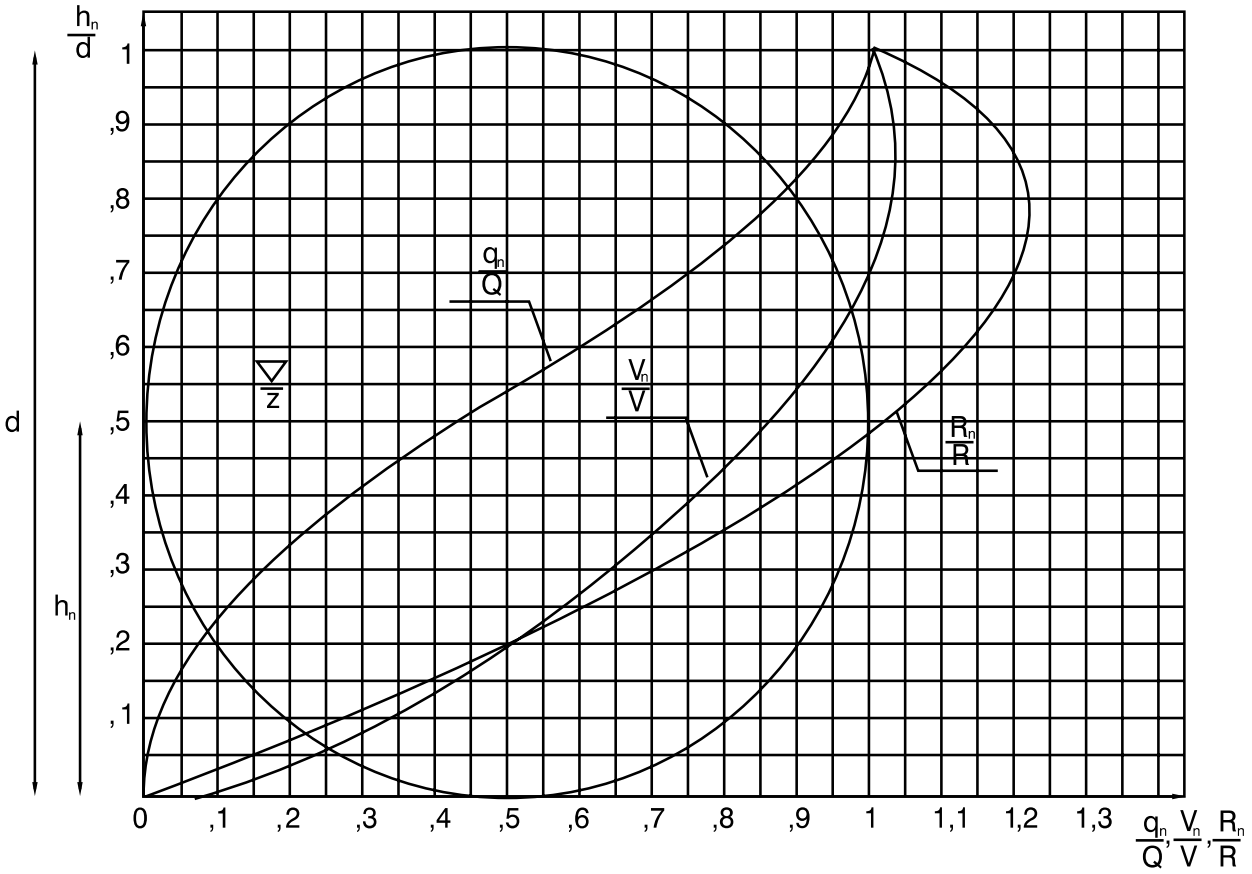

$\frac{h_n}{d}$ correlation between the flow depth and the pipe's diameter (d)

$\frac{q_n}{Q}$ correlation between the actual flow with filling (h_n) and outflow for full profile

$\frac{V_n}{V}$ correlation between the actual velocity with filling (h_n) and velocity for full profile

$\frac{R_n}{R}$ correlation between the hydraulic radius with filling (h_n) and hydraulic radius for full profile

9.4.2 NOMOGRAPHS FOR HYDRAULIC SCALING OF NON-PRESSURE FLOW IN CIRCULAR PRAGMA® PIPES WITH A FULL PROFILE

For k = 0.015 [mm], water temperature t = 10°C, full profile
Darcy-Weisbach/Colebrook-White Formula

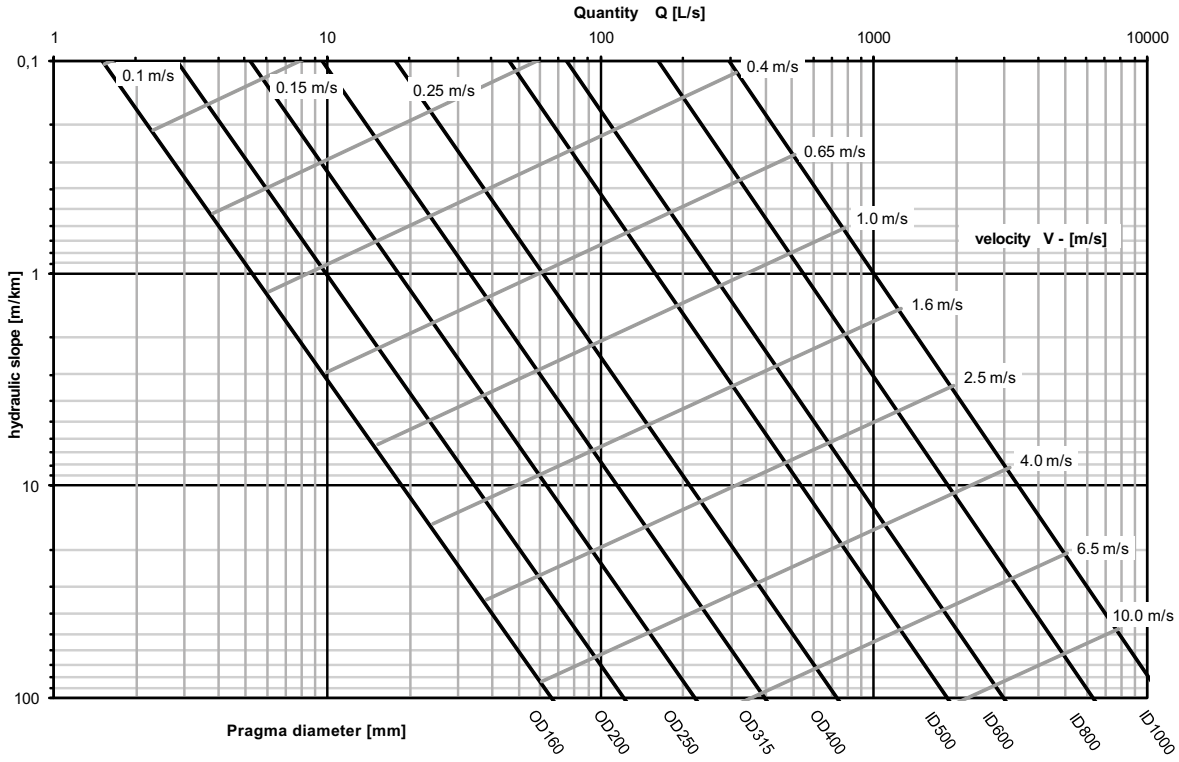

For k = 0.25 [mm], water temperature t = 10°C, full profile
Darcy-Weisbach/Colebrook-White Formula

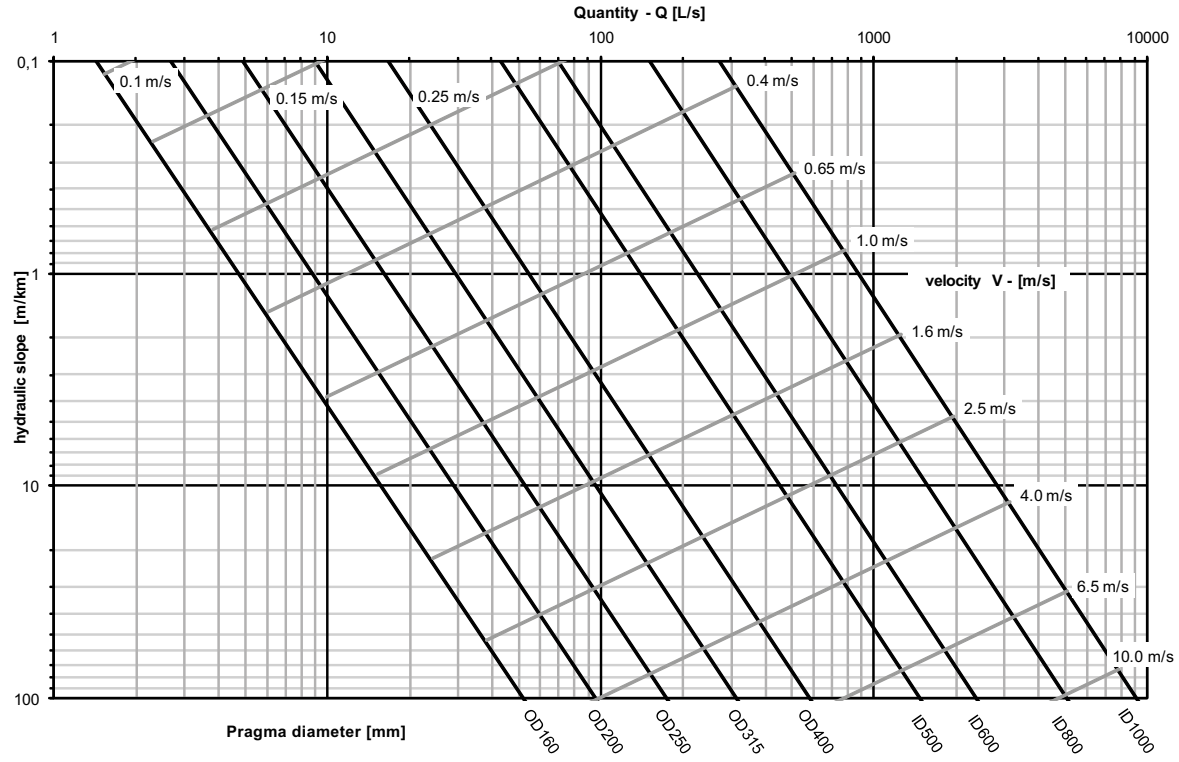

For k = 0.40 [mm], water temperature t = 10°C, full profile
Darcy-Weisbach/Colebrook-White Formula

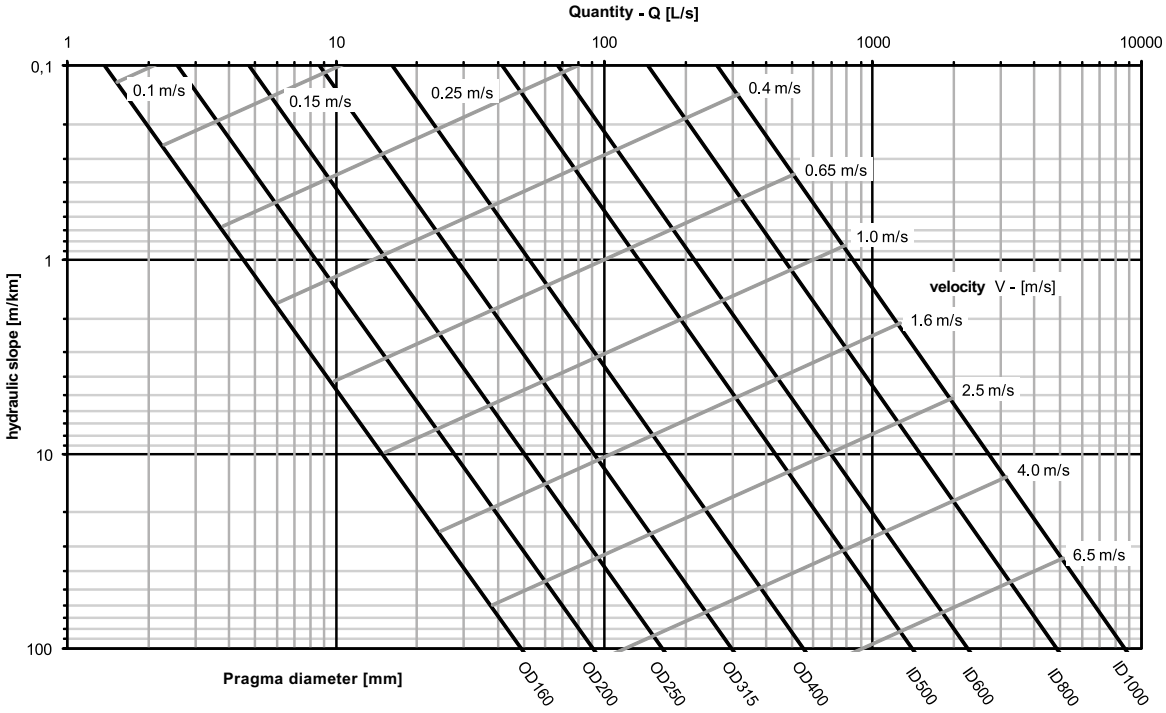

9.5 SLOPES AND VELOCITIES OF FLOW IN PRAGMA® PIPES SLOPES

The minimum slope of the sewer is determined with respect to achieving the minimum flow velocity that would prevent the suspended particles from settling and clogging the pipe.

The self-cleaning ability of the flow, preventing settling and deposition of particles on the bottom of the pipe depends on the angle of internal friction Θ (see fig. 9.1)

Θ is determined by the formula 5):

5) $$\frac{h_n}{d} = \frac{1}{2} \cdot (1 - \cos \Theta)$$

where:
hn – depth of profile flow, [m]
d – inner pipe diameter, [m]
Θ - angle of internal friction, [°]

If Θ = 35°

Then hn/d = 0,1

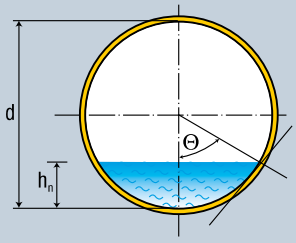

Figure 9.1. Angle of friction

The area of deposition can be assumed as a relatively horizontal layer on the bottom of the sewer.

The safe lower limit of velocity, which prevents sedimentation processes depends on the type of the settling particles (sediments).

Usually the minimum permissible velocities (V_{sc}) at full profile, securing the self-cleaning ability of the pipes must be not less than:

V_{sc} = 0,8 m/s or household sewers
V_{sc} = 0,6 m/s for storm sewers
V_{sc} = 1,0 m/s for mixed sewers

After determining the slope of the pipeline, the permissible velocity must be selected, taking into account the diameter of the pipe. The following simple formula has been used so far: 6)

6) $$i_{min} = \frac{1}{d}$$

where:
imin = minimum permissible slope
d = inner pipe diameter

The minimum slope of the sewer collector can also be expressed through the tractive force of the waste water, expressed as: 7)

7) $$\tau = \gamma \cdot R \cdot i$$

where:
γ = specific weight of waste water, [kg/m³]
R = hydraulic radius, [m]
i = hydraulic slope, [m/m]

The actual tractive force is: 8):

8) $$\tau_0 = \gamma \cdot R \cdot i \cdot k_1$$

where:
$R = \frac{d}{4}$, hidraulic radius for circual full flow pipe
k_1 = correction factor, $k_1 f\left(\frac{h_n}{d}\right)$

The formulae above show that the critical tractive force for partially full (actual) flow profile is: 9)

9) $$\tau_0 = \gamma \cdot i \cdot \frac{d}{4} \cdot \frac{R_n}{R}$$

The critical tractive force, responsible to ensure the self-cleaning ability of the sewer collector is: 10)

10) $\tau_0 \geqslant 1.5$ Pa (for storm water)

$\tau_0 \geqslant 1.5$ Pa (for sewage)

Therefore formula 9, after conversion, proves that the minimum slope of the pipeline is: 10a)

10a) $$i_{min} = \frac{0.612 \cdot 10^{-3}}{d \cdot \frac{R_n}{R}}$$ (for storm water)

10b) $$i_{min} = \frac{0.815 \cdot 10^{-3}}{d \cdot \frac{R_n}{R}}$$ (for sewage)

10 STATIC SCALING OF PRAGMA® SYSTEM

10.1 INTERACTION BETWEEN THE PIPE AND THE SURROUNDING SOIL

From the technical point of view, the plastic Pragma pipe is a flexible structure having a high ability to take up stress without failing. The classical method to evaluate the strength of a structural material is to describe the actual relation between the stress and the strain when the material is loaded. A vertical load imposed on the pipe causes a deflection (δ_v), a reduction in the vertical diameter of the flexible pipe, which takes causes it to take an elliptical shape (see Figure 10.1)

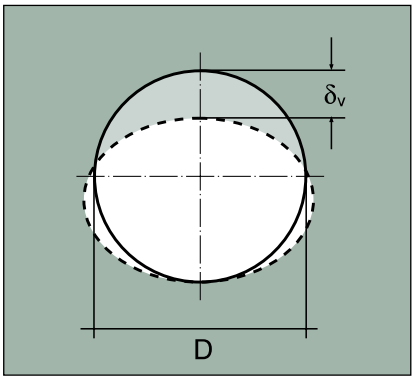

Figure 10.1 Deflection of circular pipe due to vertical load

Figure 10.2

Deflection of the pipe causes bending stress in the pipe wall and exerts pressure on the surrounding soil, and the passive earth pressure decreases the bending stress in the pipe wall. The bending stress in the pipe wall caused by deflection is in momentary balance with the soil pressure acting against the outside of the pipe wall. The force the of the soil counteracting the pipe pressure depends on the vertical load, soil type and stiffness (density) in the pipe zone and on the pipe stiffness. For rigid pipes such as concrete, etc., the pipe alone has taken the main vertical forces acting on the pipe, while flexible pipe makes use of the horizontally acting soil support exerted as a result of the pipe deflection. Consequently, for the flexible pipe, the integration between the soil and the pipe has to be considered far more extensively than in the case of rigid pipes.

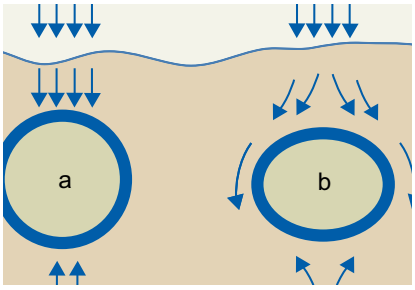

Figure 10.2

The design concept of flexible pipes can be explained with the classical Spangler formula: 11)

11)

$$\frac{\delta_v}{D} = \frac{f(g)}{(SN + S_s)}$$

δ_v – deflection of the pipe diameter

D – initial underformed pipe diameter

q – vertical load

SN – pipe ring stiffness

S_s – soil stiffness

Equation (11) describes the relative deflection of a pipe subjected to a vertical load (qv) supported by the pipe ring stiffness and the soil stiffness. This equation clearly shows that pipe deflection can be limited to the permissible magnitude by increasing one or both of the two factors, pipe ring stiffness and soil stiffness in the pipe zone. Additionally, it can be said that pipe with greater ring stiffness is less subjected to interaction with the soil and is less dependent on the soil density in the pipe zone. Whereas application of a suitable enbedment of properly compacted material (higher cost of installation) enables the use of pipes of lower ring stiffness (lower in cost), in making a decision both the engineering and economic advantages of the alter-natives must be considered.

10.2 LOAD

The soil pressure distribution for the Scandinavian Method [by Janson, Molin 1991] is shown in Figure 10.3. The buried pipe is loaded with vertical load (q_v), which causes stress and strain, and with the counteracting horizontal load (q_h).

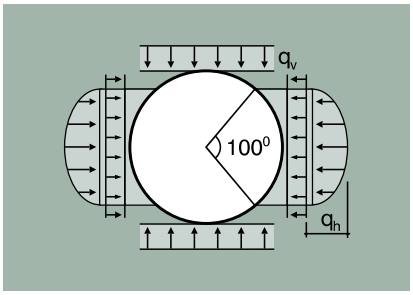

Figure 10.3 Scandinavian Model of soil pressure distribution

VERTICAL LOADS
1. Load due to soil above the pipe: 12)

12) $$q_z = \gamma_z \cdot H$$

where:
γ_z = 18 to 20 kN/m^3 for pipes above the ground water table

For pipes below the water table, the total pressure shall be increased with the hydrostatic pressure: 13)

13) $$q_w = \gamma_w \cdot h$$

In this case, vertical load is: 14)

14) $$q_z = \gamma_z(H-h) + (\gamma_{zw} \cdot h) + (\gamma_w \cdot h)$$

where:
γ_{zw} = 11 kN/m^3
γ_w = 10 kN/m^3

Under normal conditions of pipe installation, the vertical load (q_v) component is larger than the horizontal load (q_h) component. The difference (q_v - q_h) causes a reduction of the vertical pipe diameter and an increase in the horizontal pipe diameter. The pipe side walls, when deforming, mobilise a passive earth pressure of a value depending on the imposed vertical load and on the ratio between the soil stiffness and pipe stiffness. This last is expressed as the pipe ring stiffness (SN).The components of load which are likely to be imposed on a pipe in the vertical plane are:
the effect of the soil above the pipe
the effect of loads superimposed on the surface of the ground, such as those from buildings, vehicle wheel loads, etc.

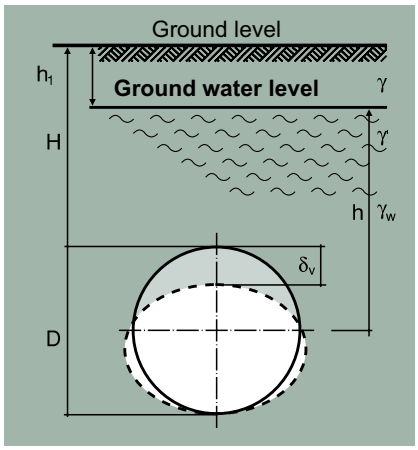

Figure 10.4 Geometry of buried pipe

10.3 SOIL TYPES ACCORDING TO BDS ENV 1046

Soil type	Soil group					Filling
	Soil groups as per ATV127	Typical name	Symbol	Distinctive feature	Examples	
Gravelly	G1	Poorly-graded gravel	(GE) [GU]	Steep granulometric curve, predominantly poorly-graded	Crushed stone, river and coastal gravel, moraines, cinder, volcanic ash	YES
		Well-graded gravels, gravel/sand mixtures	[GW]	Uninterrupted granulometric curve, several granulometric groups		
		Poorly-graded gravels, gravel/sand mixtures	(GI) [GP]	Steep granulometric curve, missing one or several granulometric groups		
		Poorly-graded sands	(SE) [SU]	Steep granulometric curve, predominantly one granulometric group	Dune sands and sediments, river sand	YES
		Well-graded sands, gravel/sand mixtures	[SW]	Uninterrupted granulometric curve, several granulometric groups	Morainal sand, coastal sand, beach sand	
		Poorly-graded sands, gravel/sand mixtures	(SI) [SP]	Steep granulometric curve, missing one or several granulometric groups		
	G2 and G3	Silty gravels, poorly-graded gravel/silt/sand mixtures	(GU) [GM]	Wide / interrupted granulometric curve with fine silty grains	Crushed gravel, sharp debris, loamy gravel	YES
		Clay-like gravels, poorly-graded gravel / sand / clay mixtures	(GT) [GC]	Wide / interrupted granulometric curve with fine silty grains		
		Silty sands, poorly-graded silt/sand mixtures	(SU) [SM]	Wide / interrupted granulometric curve with fine silty grains	Quicksand, soil, sandy loess	
		Clay-like sands, poorly-graded sand / clay mixtures	(ST) [SC]	Wide / interrupted granulometric curve with fine silty grains	Sandy soil, alluvial clay, alluvial marl	
Cohesive		Inorganic silts and very fine sands, rock flour, silty or clay-like fine sands	(UL) [ML]	Low stability, short reaction, zero to weak plasticity	Loess, clay	YES
	G4	Inorganic clays, distinctly plastic clay	(TA)(TL) (TM) [CL]	Medium to high stability, slow reaction, low to medium plasticity	Alluvial clay, clay	
Organic		Soils of mixed grain size and additions of humus and talc	[OK]	Vegetational and non-vegetational inclusions, rots, lightweight, high porosity	Upper layers, hard sand	NO
		Organic silt and organic silty clays	[OL](OU)	Moderately stable, slow to very fast reaction, low to medium plasticity	Marine chalk, upper soil layer	
		Organic clay, clay with organic inclusions	[OH](OT)	High stability, zero reaction, medium to high plasticity	Mud, soil	
Organic		Peat, other highly organic soils	(HN)(H2) [Pt]	Non-composite peat, fibrous, colored in brown to back	Peat	NO
		Slime	[F]	Slimes in silt deposits, often mixed with sand / clay / talc, very soft	Slime	

10.4 NECESSARY DATA FOR STATISTICAL CALCULATION OF THE PRAGMA® PIPE SYSTEM

With regard to the correct laying and exploitation of the sewage pipes of the Pragma® system it is important to calculate the impact of the static and the dynamic pressure. For this purpose it is necessary to take into account the soil's type, the availability of subterranean waters, the degree of covering sealing according to Proctor. The calculation can be made with the Pipelife's web software in the "For the designer" section" on www.pipelife.bg.

Also Pipelife possesses a EASYPIPE software which if necessary can make more detailed calculated statistics of the laid pipes. Both programs are based on the methodology for statistical calculation of pipes laid in the ground according to ATV 127. For the preparation of this calculation by the Pipelife's engineering team it is necessary to submit the following data:

Project data		**Project**				
		Client				
		Designer				
		Date				
Data about the soil around and in the trench zone		**Main soil groups**	**Zones (fig. 10.5)**			
			E1	**E2**	**E3**	**E4**
		G1 - cohesionless				
		G2 - slightly, insignificantly cohesive soils				
		G3 - mixed cohesive soils, coarse, raw clay (clogged with slime, sand, coarse sand and fine gravel, cohesive residual rocky soils)				
		G4 - cohesive (e.g. clay)				
Load data		**h – height of cover over the top of the pipe, [m] (fig. 10.6)**				
		Density of the embedment material, [kN/m3]				
		Additional static loads (e.g. in warehouses), [kN/m2]				
		$H_{w\ max}$ – maximum groundwater table over the top of the pipe, [m] (fig. 10.7)				
		$H_{w\ min}$ – minimum groundwater table over the top of the pipe, [m] (fig. 10.7)				
		Short-term internal pressure in the pipe, [bar]				
		Long-term internal pressure in the pipe, [bar]				
		Traffic loads (choose one of the following options)			**Traffic frequency**	
					normal	**irregular**
		LT12 – 12 tonnes - 2 (semi)axles				
		HT26 – 26 tonnes - 2 (semi)axles				
		HT39 – 39 tonnes - 3 (semi)axles				
		HT60 – 60 tonnes - 3 (semi)axles				
Covering		**First layer**		**Second layer**		
		Height h1, [m]	**Modulus of Elasticity E1, [MPa]**	**Height h2, [m]**	**Modulus of Elasticity E2, [MPa]**	
Laying	**Embankment / Trench**	**Trench width over the top of the pipe - b (m) - (from 0,1 to 20 m)**				
		Trench angle of repose - β (degrees)				
		Trench conditions from group A1 to A4 (see the available groups at the end)	**A1**	**A2**	**A3**	**A4**
		Embedment conditions from group B1 to B4 (see the available groups at the end)	**B1**	**B2**	**B3**	**B4**
		Type of bedding	**angle of laying -2α**			
			60°	**90°**	**120°**	**180°**
		sand cushion				
		concrete lining				

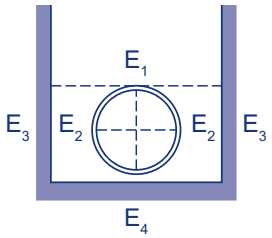

Fig. 10.5

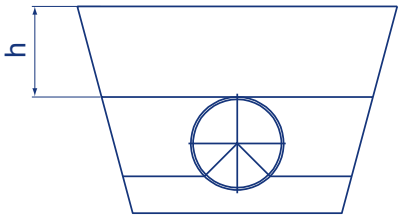

Fig. 10.6

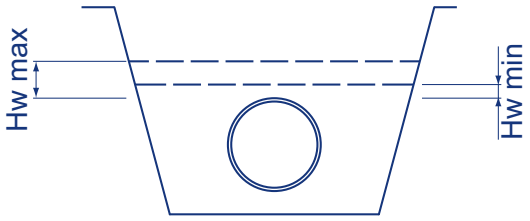

Fig. 10.7

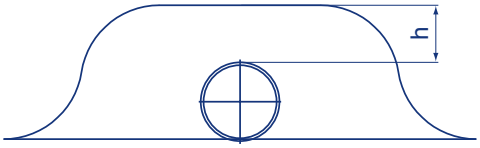

Fig. 10.8

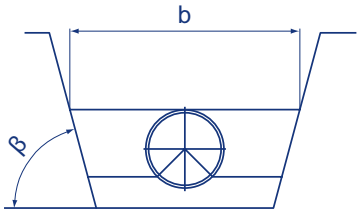

Fig. 10.9

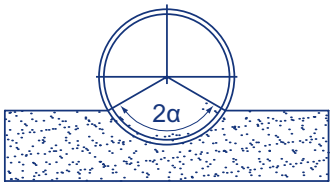

Fig. 10.10

"Cover conditions" - ('A1' to 'A4') describe the method of shoring and backfilling the trench above the pipe zone (from top of pipe to ground surface-terrain level).

A1 - The trench is filled with native soil and compacted in layers (without checking the degree of compaction), compacting also along the walls of the pipe.

A2 - Vertical trench shoring using special beams and plates, which are not removed until after the backfilling. The formwork panels or the equipment used are removed in stages during backfilling. Uncompacted trench backfilling. Washed backfilling (suitable only for soils from group G1).

A3 - Vertical trench shoring using prefabricated corrugated plates, lightweight plates, wooden beams, formwork panels or equipment, which are not removed until after the backfilling.

A4 - The backfilling is compacted in layers of native soils with degree of compaction proven as per the requirements of ZTVE-StB; it is also applied in beam pile walls. The A4 conditions are not applicable to soil from group G4.

"Embedment conditions" ('B1' to 'B4') describe the method of trench shoring and backfilling the zone around the pipe (from the bottom of the trench to the top of the pipe).

B1 - The bedding cushion is compacted in layers with the native soil or in an embankment (without checking the degree of compaction), it is also applied in beam pile walls.

B2 - Vertical shoring of the pipe zone using plates arranged along the bottom of the trench and not removed until after the backfilling and compaction.

B3 - Vertical shoring of the pipe zone using corrugated prefabricated plates, lightweight plates and compaction.

B4 - The bedding cushion is compacted in layers with the native soil or in the embankment, proving the required degree of compaction in accordance with ZTVE-StB. The conditions provided for group B4 are not applicable for soils from group G4.

The contents and information contained in this brochure are intended for general marketing purposes only and shall not be relied upon by any person as complete or accurate. In particular, this brochure cannot replace proper expert advice on the characteristics of the products, their usage, suitability for any intended purpose, or the proper processing method. All contributions and illustrations in this brochure are subject to copyright. Unless explicitly otherwise stated, the repetition of content is not permitted. The use of photocopies from this brochure is for private and non-commercial use only. Any duplication or distribution for professional purposes is strictly forbidden. Non-Liability: PIPELIFE has established this brochure to the best of its knowledge. PIPELIFE cannot accept any liability suffered or incurred by any person resulting from or in connection with any reliance on the content of or the information contained in this brochure. This limitation applies to all loss or damage of any kind, including but not limited to direct or indirect damages, consequential or punitive damages, frustrated expenses, lost profit or loss of business.
Note: The images may differ from actual products.

Production Plant /Central Warehouse, Botevgrad 2140, POB 65, 3, Industrialna Street
E office.bg@pipelife.com, **pipelife.bg**

PIPELIFE
always part of your life